

Tropicana Field

Hurricane Milton Damage Assessment

November 11, 2024

HENNESSY CONSTRUCTION SERVICES

AECOM HUNT

HENNESSY
CONSTRUCTION SERVICES

November 11, 2024

Mr. Raul Quintana, AIA
City Architect
City of St. Petersburg
1 4th Street North
St. Petersburg, Florida 33701

Re: City Facility Damage Assessment and Remediation Recommendations Report

Dear Mr. Quintana:

Hennessy Construction Services (HCS) is pleased to present our *Facility Damage Assessment and Remediation Recommendation Report* for the storm damage incurred at Tropicana Field.

To complete this evaluation and prepare the report, Hennessy Construction hired AECOM Hunt to provide its extensive expertise with sports facilities and (having been the original builder of the facility) to evaluate the likely cost of repairs and schedule for completing the necessary remediation work. Hennessy Construction and AECOM Hunt, along with a team of recognized experts assisting in the evaluation, began site assessment on October 21st, 2024. The report is organized to follow the sequence of the work authorization format. It includes the findings of the subject matter experts, who provided information concerning the assessment of the facility during the evaluation completed on November 8, 2024.

We look forward to answering any questions or comments you may have regarding this report and please do not hesitate to contact us.

Sincerely,

Mark Stalker, President/Owner
ph (727) 821-3223 x136 | c (727) 463-0600 | mstalker@hcsfl.com

Table of Contents

A. **Assessment Introduction**

B. **Building Enclosure**
   1. Dome Roof System
   2. Metal Panel System

C. **Building Electrical**
   1. Main Electrical System
   2. Lightning Protection System

D. **Mechanical Systems**
   1. HVAC
   2. Fire Protection System

E. **Architectural Systems/Finishes**

F. **Conclusions and Findings Summary**

G. **Preliminary Cost Estimate for Repairs**

H. **Estimated Schedule Durations for Repairs**

A

ASSESSMENT INTRODUCTION

HENNESSY CONSTRUCTION SERVICES

AECOM HUNT

ASSESSMENT INTRODUCTION

The Tropicana Field (Florida Suncoast Dome) was constructed in 1990 and is comprised of a cable supported fabric roof structure with metal panel enclosure and masonry block construction below. A concrete frame resting on deep pile foundations provides the structure to support the roof system and seating bowl for the stadium.

A renovation of the facility to support MLB baseball (home for the Tampa Bay Rays) was completed in 1997 including building additions for concessions along 1st first and 3rd base lines at the Concourse level, fit-out of club and individual suites, and reconfiguration of the stadium lower bowl seating areas. Team office space was constructed along the east site of the stadium utilizing structural steel framing to support the multi-level addition.

On October 10, hurricane Milton reached landfall in St. Petersburg, FL exposing the facility to the forces of a Category 3 hurricane. As a result of this weather event, significant damage to the fabric roof system and other components of the stadium occurred as a result of the direct exposure to the high winds and rainfall of the storm system. Interior components became exposed to the effects of the winds and rain as the fabric roof became compromised and experienced damage.

On October 14, 2024, Hennessy Construction, was authorized by the City of St. Petersburg, to evaluate the post hurricane conditions of Tropicana Field and begin an assessment to begin capturing the extent of the damage to the facility. To complete this evaluation, Hennessy Construction hired AECOM Hunt to provide its extensive expertise with sports facilities and (having been the original builder of the facility) to evaluate the likely cost for repairs and to render an opinion on a preliminary estimated construction schedule to effect repairs. Hennessy Construction and AECOM Hunt began site assessment along other with recognized experts to assist in the evaluation.

The report is organized to follow the sequence of the work authorization format and includes the findings of the subject matter experts who have provided information concerning the assessment of the facility throughout the course of the assessment.

The following firms contributed to the Assessment, providing their observations and expertise.

Hennessy Construction

AECOM Hunt

Geiger Engineers – Dome Structure/Fabric Roof

Crown Corr – Building Enclosure Metal Panels

APG Electric– Electrical Systems

Prime Air - Mechanical HVAC Systems

Weaver Fire Protection Services, Inc.– Fire Protection

EFI Global - Architectural Hygienist

The Assessment is organized to follow the outline of the work description provided to Hennessy Construction by the City of St. Petersburg which is shown in the Index for the Assessment.

B

Building Enclosure

(Fabric Roof and Metal Panel Enclosure System)

HENNESSY CONSTRUCTION SERVICES

AECOM HUNT

GEIGER ENGINEERS

Geiger Lynch Emery Campbell Engineers P.C.

Tropicana Field Roof
Structure Condition Assessment

St. Petersburg, Florida

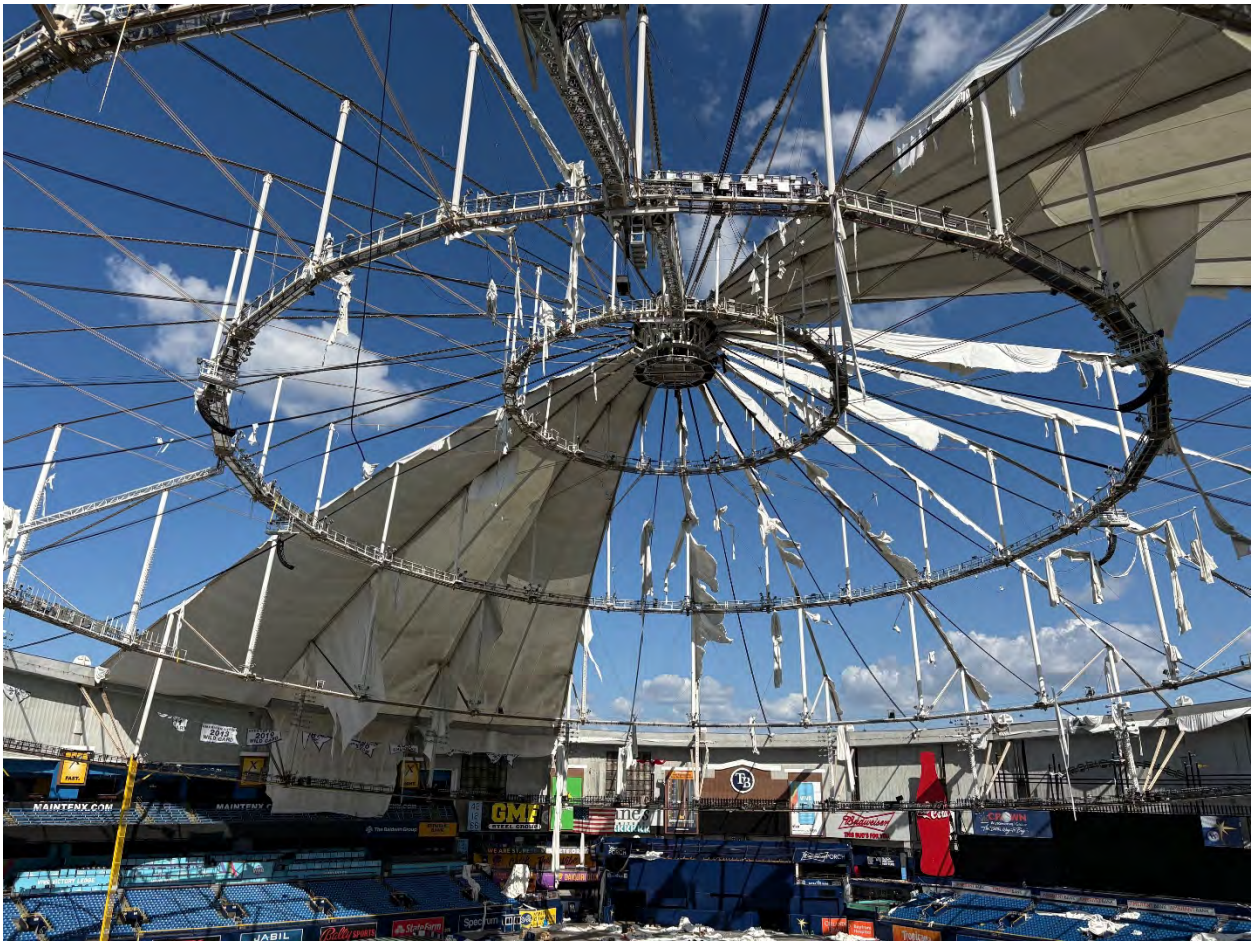

Report Information

Report Date: 11 November 2024
Report Prepared by: Geiger Engineers
Report Prepared for: Hennessy/ AECOM Hunt
Engineer of Record: David M. Campbell, P.E.
Geiger Job No: 224094-00

DAVID M. CAMPBELL LICENSE No 73244 STATE OF FLORIDA PROFESSIONAL ENGINEER

2 Executive Blvd., Suite 309 | Suffern, NY 10901
845.368.3330 | www.geigerengineers.com

Table of Contents

Background 3
Summary of Observations 4
Conclusions 8
Recommendations 9
Appendix 1 – Observed Issues 10
Contents: 10
Fabric Issues 10
Cable Issues 10
Steel Issues 10
Cladding Issues 10
Appendix 2 – Roof Structural Drawings 11

Background

Tropicana Field (a.k.a. Florida Suncoast Dome) was completed in 1990, whereas the roof structure was completed in 1989. The facility is covered by a Geiger cabledome, the largest built to date with a diameter/span of 688' and covered diameter of 706'. The structure is circular (24 sided polygon) and tilted at nominally 6 degrees off the horizontal and is therefore slightly elliptical in plan. The cabledome is supported on 24 external columns on large spread footings and is independent of the ballpark's seating and concourse internal superstructure. The cabledome was clad with a tensioned membrane of ptfe-coated fiberglass fabric. The tension membrane consisted of 24 shop fabricated panels. The panels are clamped to the ridge cables and at the inside sawtooth flange of the compression ring.

The primary lateral force resisting system for the roof structure is an "ordinary" moment frame comprised of the compression ring, the 24 roof columns and the steel "wind" bracing at the below the compression ring to varying heights above grade. The roof columns are founded on large spread footings.

Additions and modifications were made in the late 1990's to fit out the building for its MLB tenant, the Tampa Bay Rays. No revisions were made to the facility's cabledome roof structure as part of this effort

On Wednesday October 9th, hurricane Milton hit the Tampa Bay area of Florida with 100+ mph winds. The dome's fabric roof membrane failed during Milton, initially one or two of the roof's 24 panels and overnight into the morning of October 10th, all but six of the roof panels were lost.

David Campbell, P.E. and Eric Dahl, P.E. of Geiger Engineers visited Tropicana Field to visually inspect the condition of the roof structure the week of October 21st 2024. This assessment was commissioned by Hennessy Construction Services with AECOM Hunt to ascertain the condition of the cabledome structure and its serviceability to support a new tension membrane roof. All assessments and recommendations are based upon visual inspection.

Summary of Observations

1. **24 Main dome columns**: The columns are segmental precast concrete tube sections. Highest moment demand is typically at the cross-bracing/girt truss connections and at the 'band beam connections for some columns. Other areas of interest are at the column base and the top of column connection to the ring beam.

   Observations: Columns were visually inspected on the interior and exterior of the stadium bowl. No signs of cracking or other distress were observed. Connections to the 'wind' steel bracing were covered by façade panels and could not be inspected.

2. **24 Bays, 'Wind' bracing**: Steel wind bracing, girt trusses, band beams, and their connections were hidden by cladding and could not be reviewed.

3. **Cladding panels**: The region between the concrete ringbeam and steel band beams is covered with steel cladding panels. These panels are not considered part of the structural system.

   Observations: Several panels on both the interior and exterior of the stadium were damaged during Hurricane Milton. To ensure safety, all loose panels should be promptly removed or securely fastened to prevent potential falling debris. For visual examples of exterior cladding failures, please refer to the "Cladding Issues" section in Appendix 1. All cladding should be repaired and properly fastened prior to re-occupancy of the ballpark.

4. **Concrete compression ringbeam**: The compression ringbeam is an open channel assembled from precast units with the "web" in the inclined plane of the dome tilt. The cabledome ridge, outer diagonal and valley cables anchor at the ringbeam.

   Observations: The ring is currently filled with debris and remnants of the roof fabric panels. These items should be removed to prevent potential falling debris. No signs of cracking or overstress were observed in the actual concrete ring itself.

5. **24 Ridge/ Diagonal Cable Anchorages at Ringbeam**: The cabledome outer diagonals and ridge cables are comprised of multiple 7-wire strand tendons and a single wire rope "indexing cable". The 7-wire strand tendons are anchored at the ringbeam though conduit in cast-in-place concrete ribs and bear on steel anchor plates via wedge anchors.

   Observations: The 7-wire strands were visually inspected for anchors slippage, missing, or damage as well as the concrete for signs of damage or overstress, primarily cracking. No issues were observed. Note the anchorage covers were not removed, so the condition of the tendon anchors is not known other than what can be inferred from the condition of the ridge and diagonal cable bundles.

6. **24 Valley Cable Anchorages at Ringbeam**: The cabledome valley cables comprised of multiple 7-wire strand tendons are anchored at the ringbeam though conduit in cast-in-place concrete ribs and bear on steel anchor plates via wedge anchors.

   Observations: Cables were visually inspected for signs of 7-wire strand anchors slippage, missing, or damage as well as the concrete for signs of damage or overstress, primarily cracking. No issues were observed.

7. **Ringbeam Fabric Clamp Hardware:** The roof fabric panels are clamped to the "sawtooth" flange of the ring beam with a pair of aluminum plates. See detail 4/3.1E-1 in Appendix 2.

   Observations: The clamps were generally found to be in good condition and appear to be reusable. However, in some areas, the edge rope caused bending in the top clamping plate, necessitating replacement. For photos, please see the "Fabric Issues" section in Appendix 1. Furthermore, the waterproofing gasket between the bottom plate and the concrete ring beam has shown signs of deterioration and may warrant replacement.

8. **Ponding Cables:** Twenty-four pairs of ponding cables were installed from the valley anchorages to the tops of the "D Ring" struts. These cables are designed to prevent rainwater accumulation when combined with downward wind forces.

   Observations: During Hurricane Milton, 14 out of 48 cables dislodged from the ring beam as a consequence of the cables' connections to the ringbeam having failed. The remaining cables and their connections to the ringbeam are considered suspect and will require strength validation if they are to remain in use. If the stadium roof is replaced, these failed cables will need to be reinstalled. For photos, refer to the "Cable Issues" section in Appendix 1.

9. **24 Cabledome Outer Diagonal Cables:** The cabledome outer diagonals D-hoop to ringbeam are comprised of two bundles of multiple 7-wire strand tendons which splay anchor to the ringbeam either side of the ridge cable.

   Observations: A visual inspection of the cables revealed no damaged tendons or slack tendons. While no cables were found damaged, the protective sheathing has deteriorated in some locations and should be repaired to prevent cable corrosion. For photos, refer to the "Cable Issues" section in Appendix 1.

10. **24 Cabledome Outer Ridge Cables:** The cabledome outer ridge cables from D-struts to ringbeam are comprised of bundles of multiple 7-wire strand tendons and a wire rope.

    Observations: A visual inspection of the cables revealed no damaged tendons or slack tendons. While no cables were found damaged, the protective sheathing was observed

to be compromised in one location and should be repaired to prevent cable corrosion. For photos, refer to the "Cable Issues" section in Appendix 1.

11. **Ridge Clamp Hardware:** The radial edges of the roof fabric panels are clamped to ridge cables with hardware similar to detail 1/3.1E-1 in Appendix 2.

    Observations: The ridge clamp hardware was challenging to visually inspect from the catwalk or ring beam, so drones and rope access workers were used for observations. In several areas, the sheet metal covering the clamps was torn off and will require replacement. Additionally, in one location, the bottom portion of a clamp either became loose or failed entirely. Refer to the "Fabric Issues" section in Appendix 1.

12. **Radial Catwalk Bridge**: Radial catwalk bridge from the dome perimeter to center tension ring was visually inspected. No signs of damage were observed.

13. **A,B,C and D-Rings:** The catwalks are supported by the cabledome's tension rings which are comprised of bundles of multiple 7-wire strand tendons. The catwalks are made of steel modules clamped to the inner and outer tendon bundles of the tension rings.

    Observations: All cables in the tension rings were observed to be intact. A conduit bridge truss was observed to be supported by a single hanger rod and one of its "safety" cables. This connection should have at least 2 rods for redundancy. For photos, refer to the "Steel Issues" section in Appendix 1.

14. **24 D-Ring to Diagonal and D-Strut Connections:** The outer diagonals terminate at the ring cast steel saddle connections which are pinned to the struts. These saddles are modules that project radially inward to provide saddles for the individual ring bundles. The outer diagonals are terminated at the inner most ring bundle saddles. No signs of distress were observed.

15. **24 Cabledome Struts:** Steel tube struts from the tension ring hoops to the ridge cable including the ridge cable saddle and connection.

    Observations: The steel tubes were inspected for straightness and signs of distress. No significant structural damage was observed. However, several struts sustained paint damage that should be repaired to prevent corrosion. For photos, refer to the "Steel Issues" section in Appendix 1.

16. **Center Tension Ring:** The center tension ring was visually inspected for damaged 7-wire strand connections or missing anchors. No signs of distress were observed.

17. **Center Mechanical Platform:** Joints in the ductwork appear to have separated. It is not clear whether this is a result of the hurricane.

18. **Center Cupola:** No signs of damage were found in the center cupola framing, connections. metal deck, roofing, or flashing.

19. **Fabric Panels**: 6/24 fabric panels remain intact.

    Observations: Holes were observed in several areas and should be promptly patched to prevent further tearing. Additionally, valley cable covers have delaminated from the main roof panels in certain locations. The panels have also lost significant prestress, making them vulnerable to severe wind events. For photos, refer to the "Fabric Issues" section in Appendix 1, and see the "Recommendations" section of the report for further details.

20. **Backstop Net Rigging:** The primary catenary cables of the back stop and foul ball netting are attached to the D- tubes. The backstop support rigging appears to have been compromised by falling fabric. It is suggested that it be removed and replaced. For photos, refer to the "Cable Issues" section in Appendix 1.

Conclusions

1. The primary roof structure of Tropicana Field, consisting of the cabledome and its supports, does not appear to have been adversely affected by hurricane Milton's winds and the failure of 18 of 24 of the dome's tension membrane fabric panels. The primary structure is serviceable and capable of supporting a replacement tension membrane fabric roof. In the process of installing and tensioning new roof fabric some damage or existing condition which was not visible during our site observations may be exposed and require remediation or repair; however, there are no outwardly visible indications of such for the primary structure.

2. The cabledome's secondary members and subsystems such as the catwalks do not appear to have been adversely affected by hurricane Milton with the notable exception of the roof 'ponding' cables. The connections of the roof ponding cables to the perimeter compression ring may need to be replaced in total. These cables are interior below the outer fabric and limit deformation of the outer tensioned fabric between the ridge cables at the D-struts and the perimeter compression ring. Some of these ponding cable connections failed during Milton. The peak demands on these cables is a function of the stiffness of the outer fabric. Therefore the demand would need to be redetermined should a fabric membrane that differs from the original material be employed for replacement.

3. The cabledome's 24 valley cables, each comprised of a bundle of sixteen 7-wire strand tendons, resist uplift on the roof surface and are post-tensioned to tension the outer fabric panels. The valley cable tendons' 'dead' ends are at the center tension ring and the 'live' ends are anchored at the compression ringbeam though conduit in cast-in-place concrete ribs and bear on steel anchor plates via wedge anchors. While the valley cables do not appear to be damaged they may need to be replaced in order to install and tension new outer fabric panels. Moreover, previous project records indicate that the ringbeam ends of valley cable 20 is not 'live' as the tendons were spliced in a way that precludes jacking them at the ringbeam. A solution for this valley will have to be determined prior to installing new fabric in this bay.

4. The fabric clamp hardware used to fasten the roof outer fabric panels to the "sawtooth" flange of the compression ringbeam appears to be in good shape and for the most part can be reused to attached new roof fabric to the ringbeam. Similarly, although close inspection was not possible, it appears that much of the ridge cable fabric clamping is in good shape and could be reused.

Recommendations

The cabledome of Tropicana Field is serviceable and capable of supporting a replacement tension membrane fabric roof. We have the following recommendations should fabric replacement be pursued:

1. We recommend that the dome be covered in all new outer fabric panels. This includes replacement of the existing surviving 6 roof outer fabric panels.

2. We recommend replacement of the outer fabric similar to the original design but per current Code and the authority having jurisdiction. We note that the intended service life of the new outer fabric is less than five years and need not be considered permanent. (If this limited-service period were not the case, our recommendations would differ.) As the original outer fabric material manufacturer no longer exists, the new fabric will have to be different. The original outer fabric material's generic type, ptfe-coated fiberglass, is still manufactured in Europe and Asia and could be employed; however, we recommend the use of a suitably strong pvc-coated polyester fabric as it is more readily available, is easier to fabricate, handle, and install. The primary material differences between pvc-coated polyester and ptfe-coated fiberglass are the useful service life, which in this instance will not be a concern, and the fact that pvc-coated polyester is highly flame retardant, will meet spread of flame and other roof surface requirements per Code, but is not deemed to be non-combustible as is ptfe-coated fiberglass. Consequently, the authority having jurisdiction should review and permit the fabric replacement with this understanding. Whatever fabric material is employed, it will be somewhat different in its stiffness to the original outer fabric material and will require engineering analysis to demonstrate its suitability and interaction with the ponding cables.

3. We recommend replacement of the outer fabric without a liner subject to the review and agreement of MLB and the City. This will result in a change in the ballpark's 'room' acoustics, making it "livelier" as the liner's primary function was to absorb sound as an "acoustic ceiling". All things being equal, light transmission through the dome will be greater without the liner, especially with respect to recent years, as the liner was quite soiled. Without a liner the light transmission will be solely a consequence of the optical properties of the replacement outer fabric.

4. The loose fabric should be removed from the cabledome structure leaving the existing clamping in place.

5. Loose ridge clamping sheet metal covers should be either removed or secured in place, so as to not create a falling debris hazard for work in the ballpark. Note these metal covers will have to be removed to access the ridge clamps and reinstalled or replaced as part of the new fabric installation.

Appendix 1 – Observed Issues

Contents:

Fabric Issues
Cable Issues
Steel Issues
Cladding Issues

Pin	Issue ID	Description	Location Detail	Status	Company	Type	Date Created	Due Date

CATWALK (9 issues)

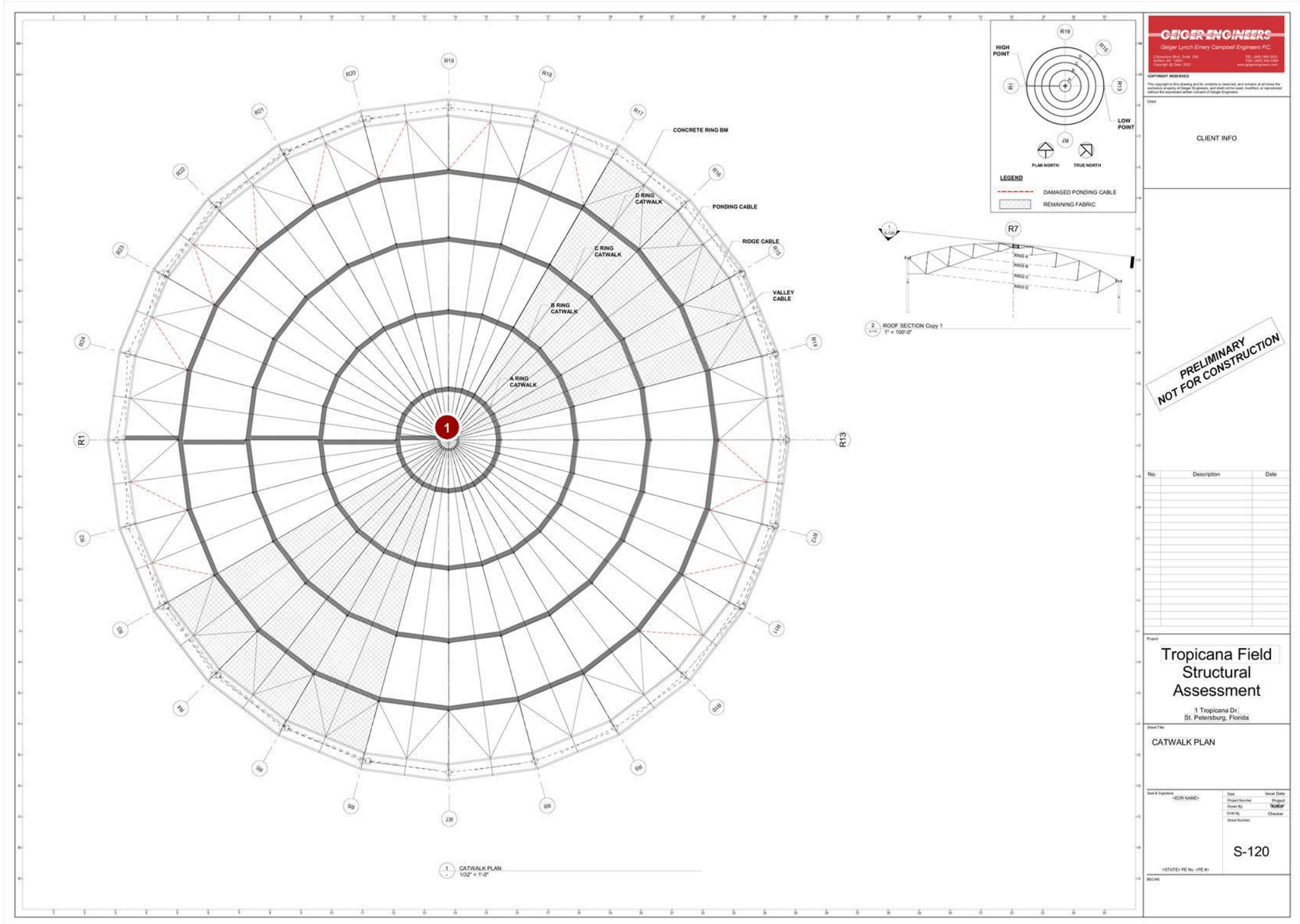

S-120 - CATWALK PLAN.pdf

Draft Open Work Completed Ready to Inspect Closed Not Approved In Dispute

Pin	Issue ID	Description	Location Detail	Status	Company	Type	Date Created	Due Date
1	000082	Sheet metal cover plate missing for ridge cable clamping		Open	<not set>	Issue - Fabric	25 Oct 2024	

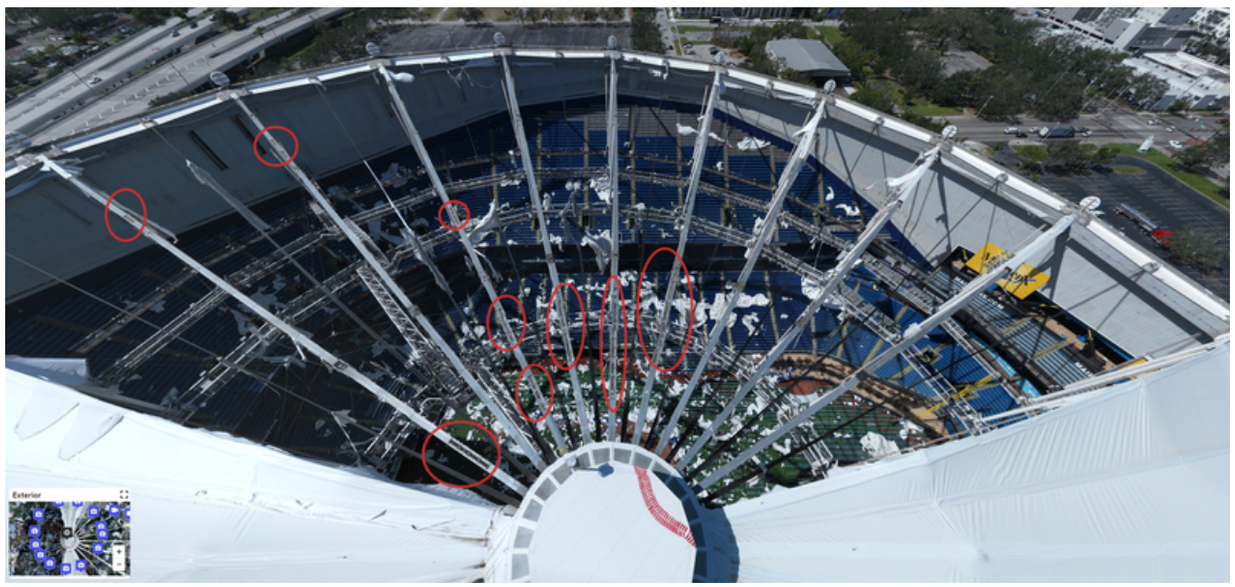

2024-10-25 15:19:19

End of 000082 images

Pin	Issue ID	Description	Location Detail	Status	Company	Type	Date Created	Due Date

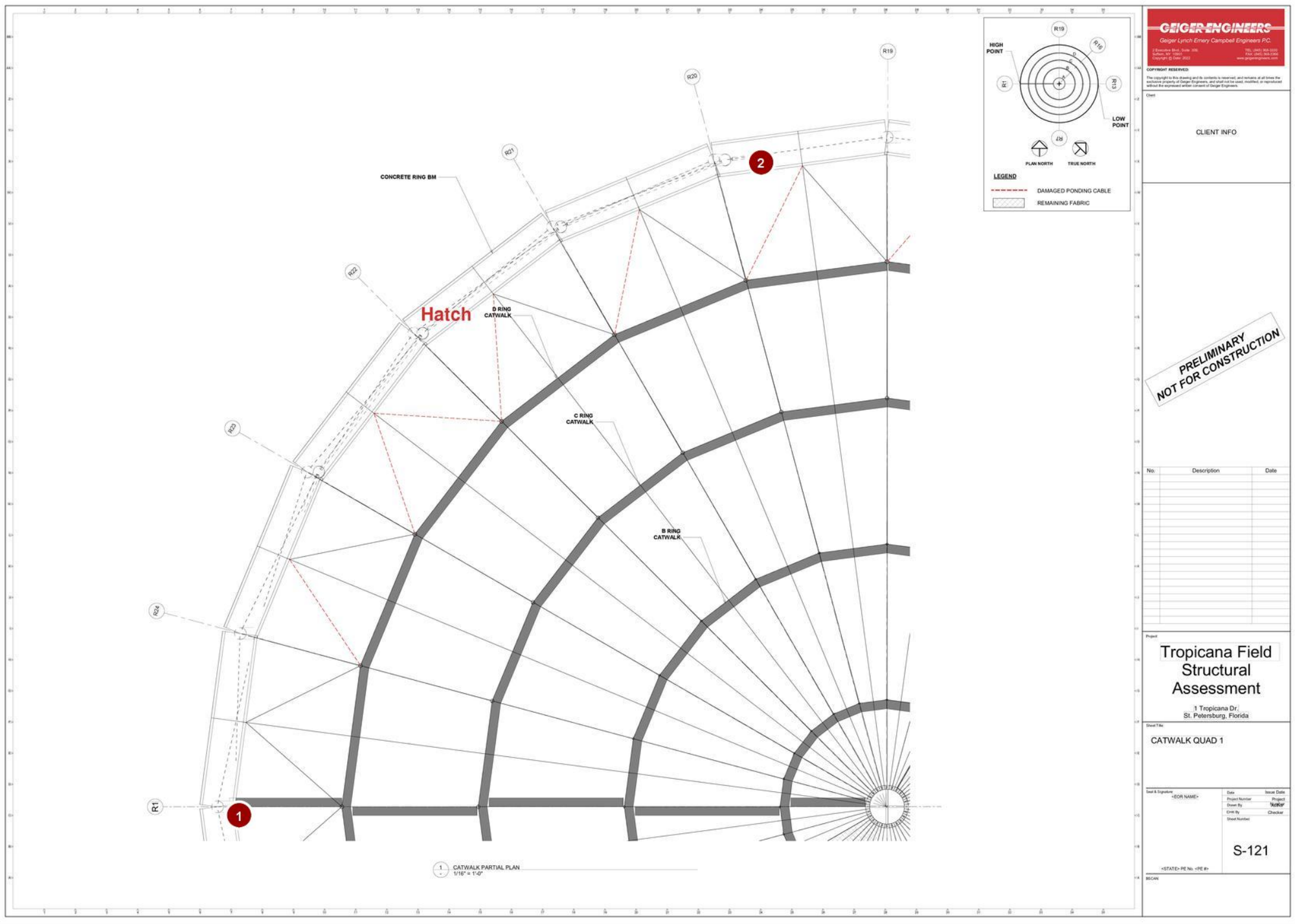

S-121 - CATWALK QUAD 1.pdf -

Draft	Open	Work Completed	Ready to Inspect	Closed	Not Approved	In Dispute

1	000048	Ring beam to fabric clamp failure.		Open	<not set>	Issue - Fabric	22 Oct 2024	

Pin	Issue ID	Description	Location Detail	Status	Company	Type	Date Created	Due Date

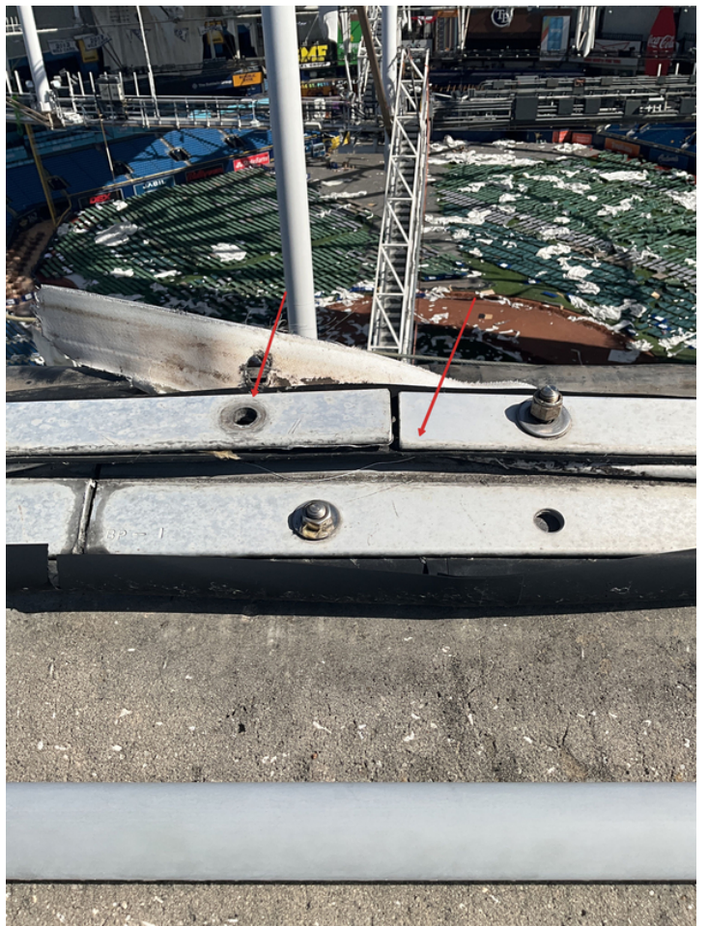

2024-10-22 11:41:34

End of 000048 images

Issues - Fabric

Pin	Issue ID	Description	Location Detail	Status	Company	Type	Date Created	Due Date
2	000071	Fabric clamp failure on concrete ring.		Open	<not set>	Issue - Fabric	23 Oct 2024	



2024-10-23 09:30:56

End of 000071 images

Pin	Issue ID	Description	Location Detail	Status	Company	Type	Date Created	Due Date

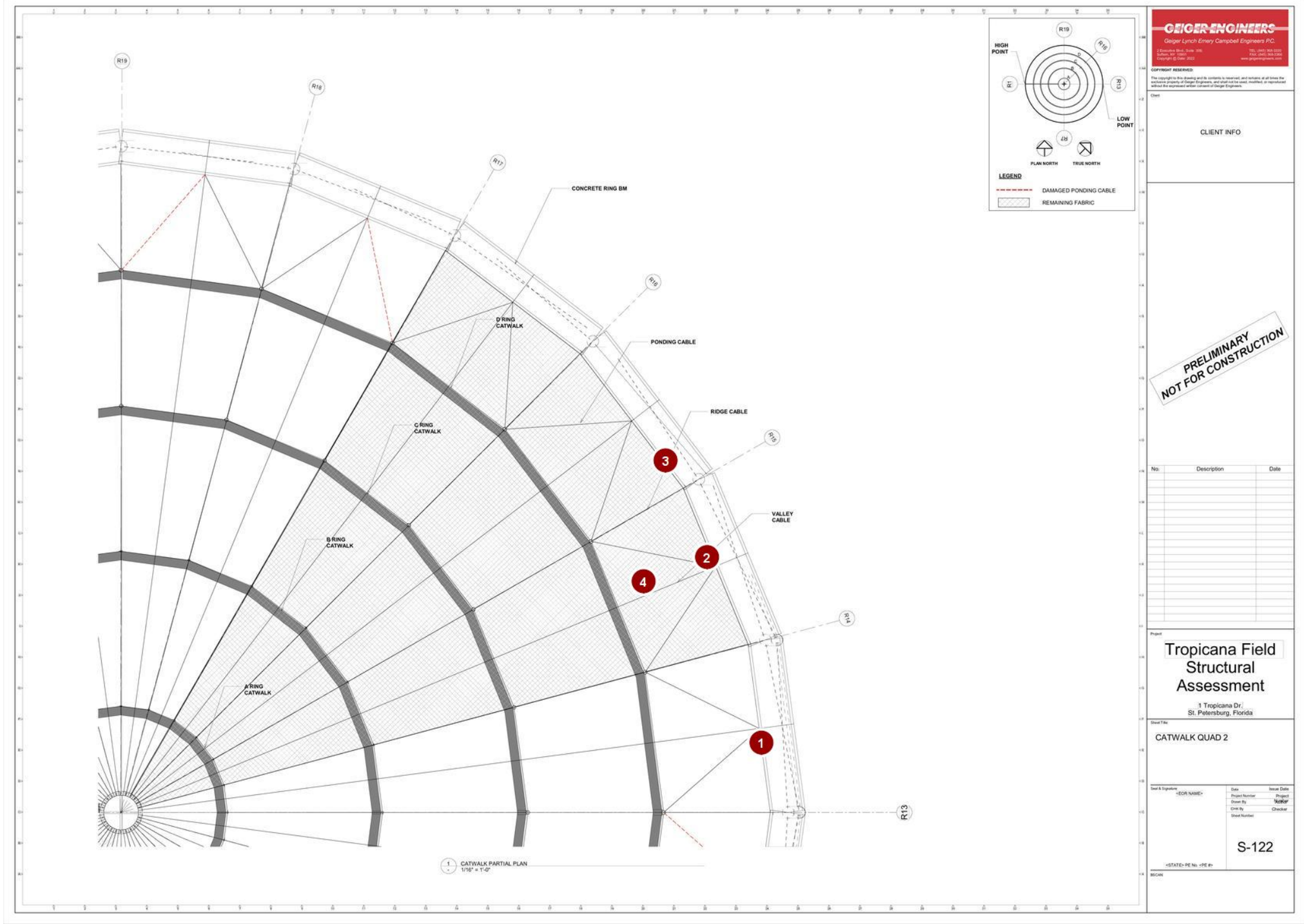

S-122 - CATWALK QUAD 2.pdf -

Draft	Open	Work Completed	Ready to Inspect	Closed	Not Approved	In Dispute

1	000034	Ring beam to fabric clamp failure.		Open	<not set>	Issue - Fabric	22 Oct 2024

Issues - Fabric

Pin	Issue ID	Description	Location Detail	Status	Company	Type	Date Created	Due Date

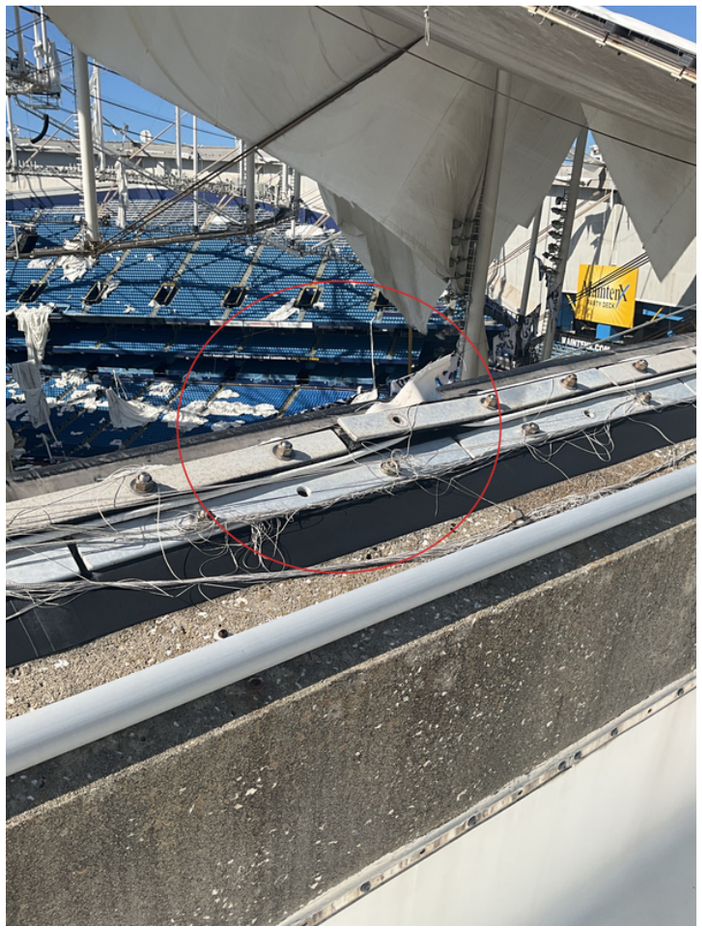

2024-10-22 11:09:07

End of 000034 images

Issues - Fabric

Pin	Issue ID	Description	Location Detail	Status	Company	Type	Date Created	Due Date
2	000036	Fabric tear in remaining panel. Tear should be patched to prevent propagation. This tear was likely caused by the ponding cables below.		Open	<not set>	Issue - Fabric	22 Oct 2024	

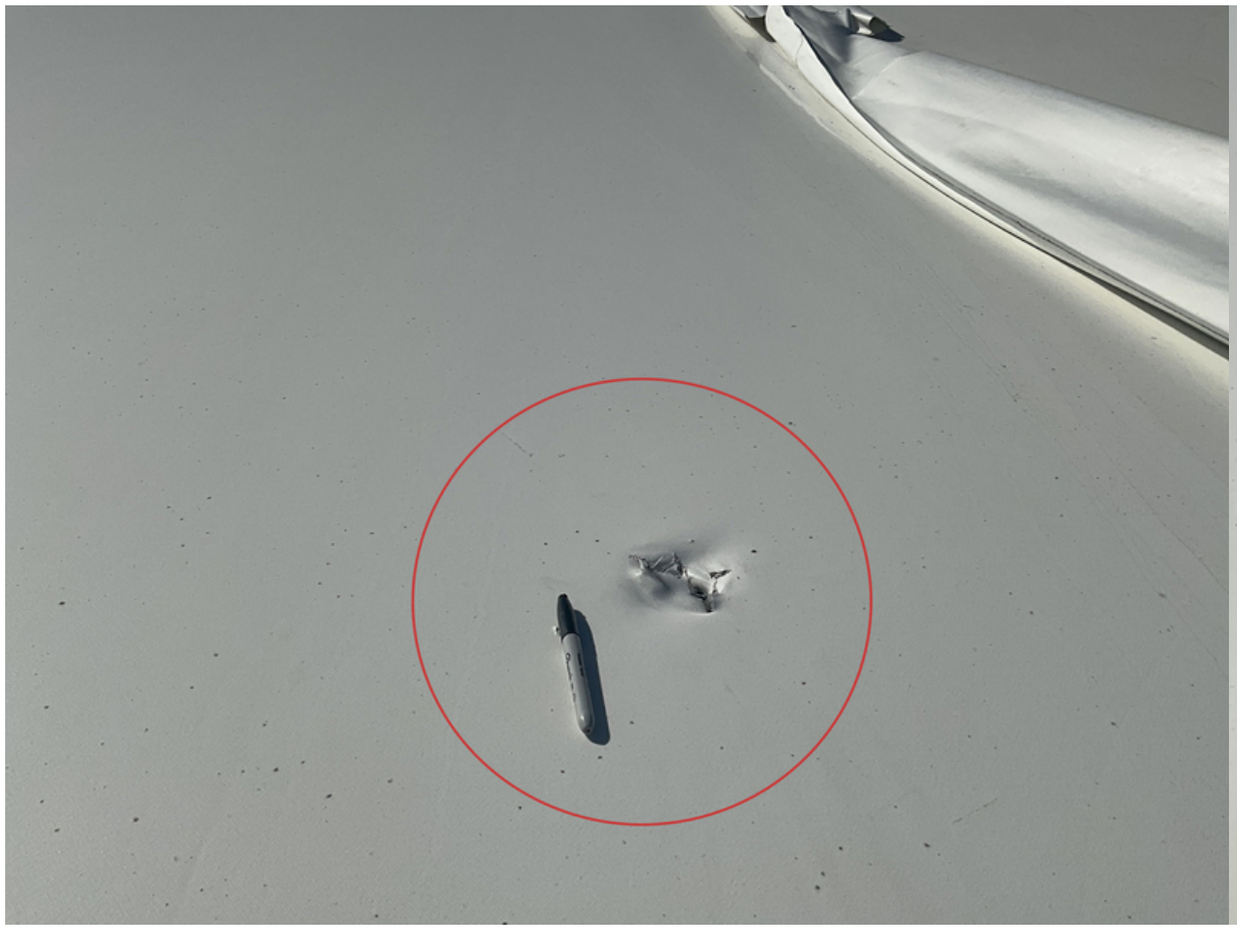

2024-10-22 11:12:34



2024-10-22 11:12:13

End of 000036 images

Pin	Issue ID	Description	Location Detail	Status	Company	Type	Date Created	Due Date
3	000074	Fabric tear in remaining panel.		Open	<not set>	Issue - Fabric	23 Oct 2024	

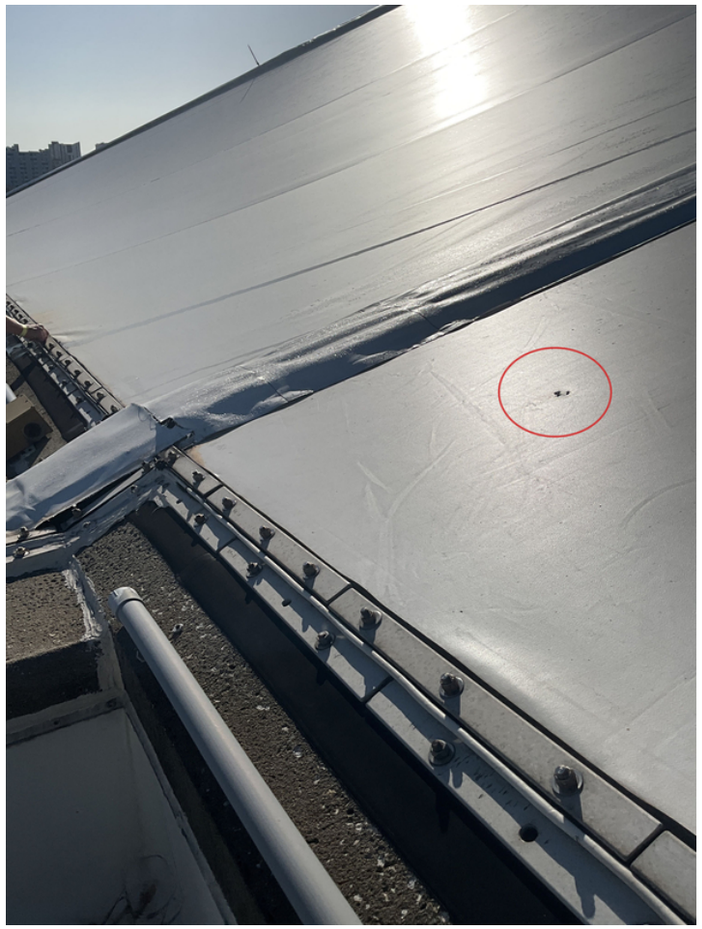

2024-10-23 09:56:28



2024-10-23 09:56:26

End of 000074 images

Pin	Issue ID	Description	Location Detail	Status	Company	Type	Date Created	Due Date
4	000075	Valley cable cover damaged in remaining panels.		Open	<not set>	Issue - Fabric	23 Oct 2024	



2024-10-23 10:01:04

End of 000075 images

Pin	Issue ID	Description	Location Detail	Status	Company	Type	Date Created	Due Date

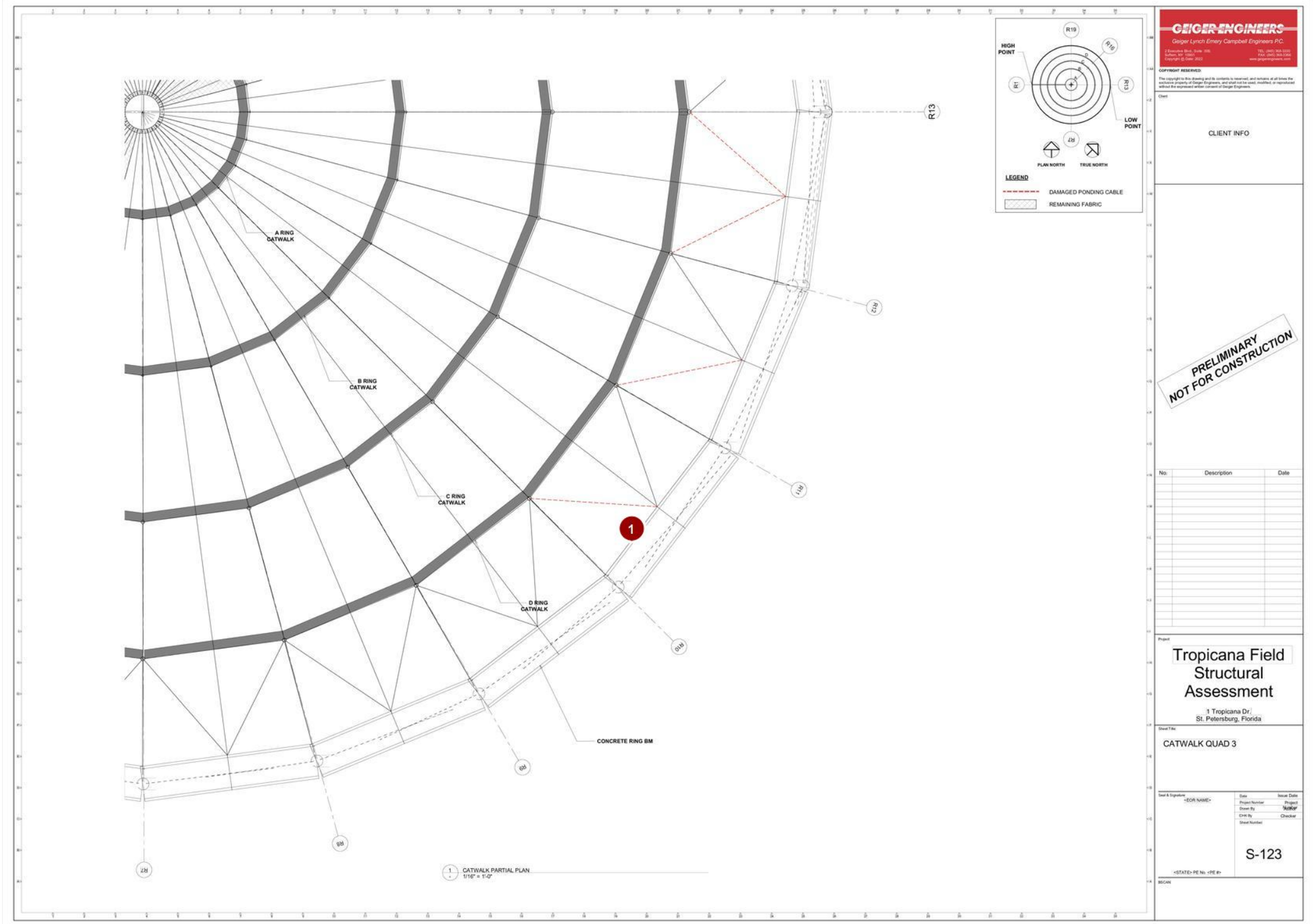

S-123 - CATWALK QUAD 3.pdf

Draft	Open	Work Completed	Ready to Inspect	Closed	Not Approved	In Dispute

1	000027	Ring beam to fabric clamp failure.		Open	<not set>	Issue - Fabric	22 Oct 2024

Pin	Issue ID	Description	Location Detail	Status	Company	Type	Date Created	Due Date



2024-10-22 10:55:12



2024-10-22 10:55:08

End of 000027 images

Issues without Pushpins

Pin	Issue ID	Description	Location Detail	Status	Company	Type	Date Created	Due Date
Issues without Pushpins								
	000084	Ridge clamp missing bottom plate. Photo was provided by rope access work. Location unknown.		Open	<not set>	Issue - Fabric	28 Oct 2024	

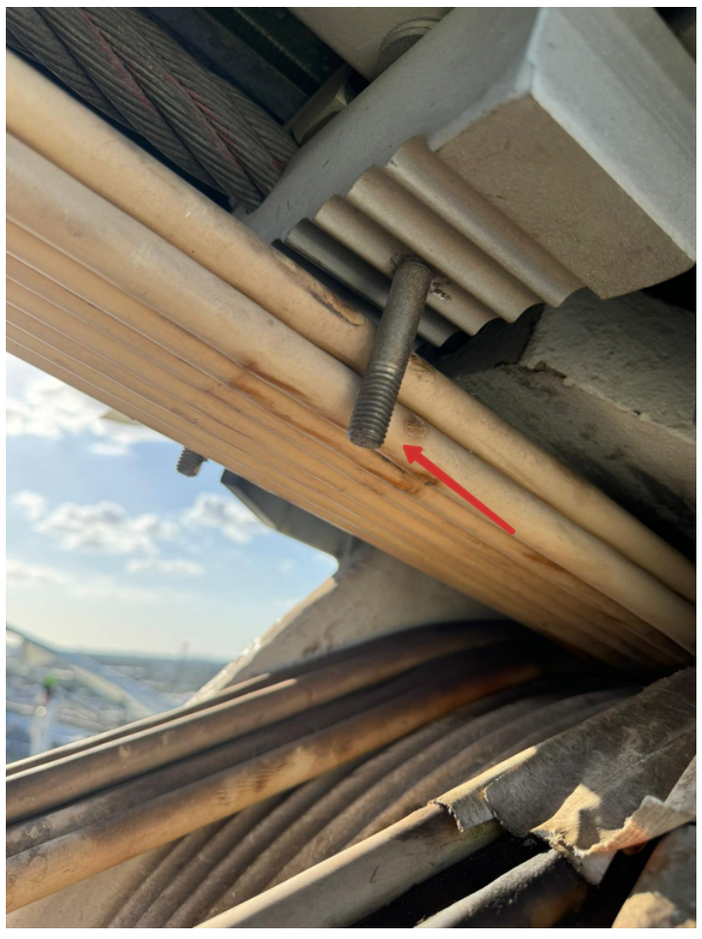

2024-10-28 18:20:29

End of 000084 images

Pin	Issue ID	Description	Location Detail	Status	Company	Type	Date Created	Due Date

CATWALK (16 issues)

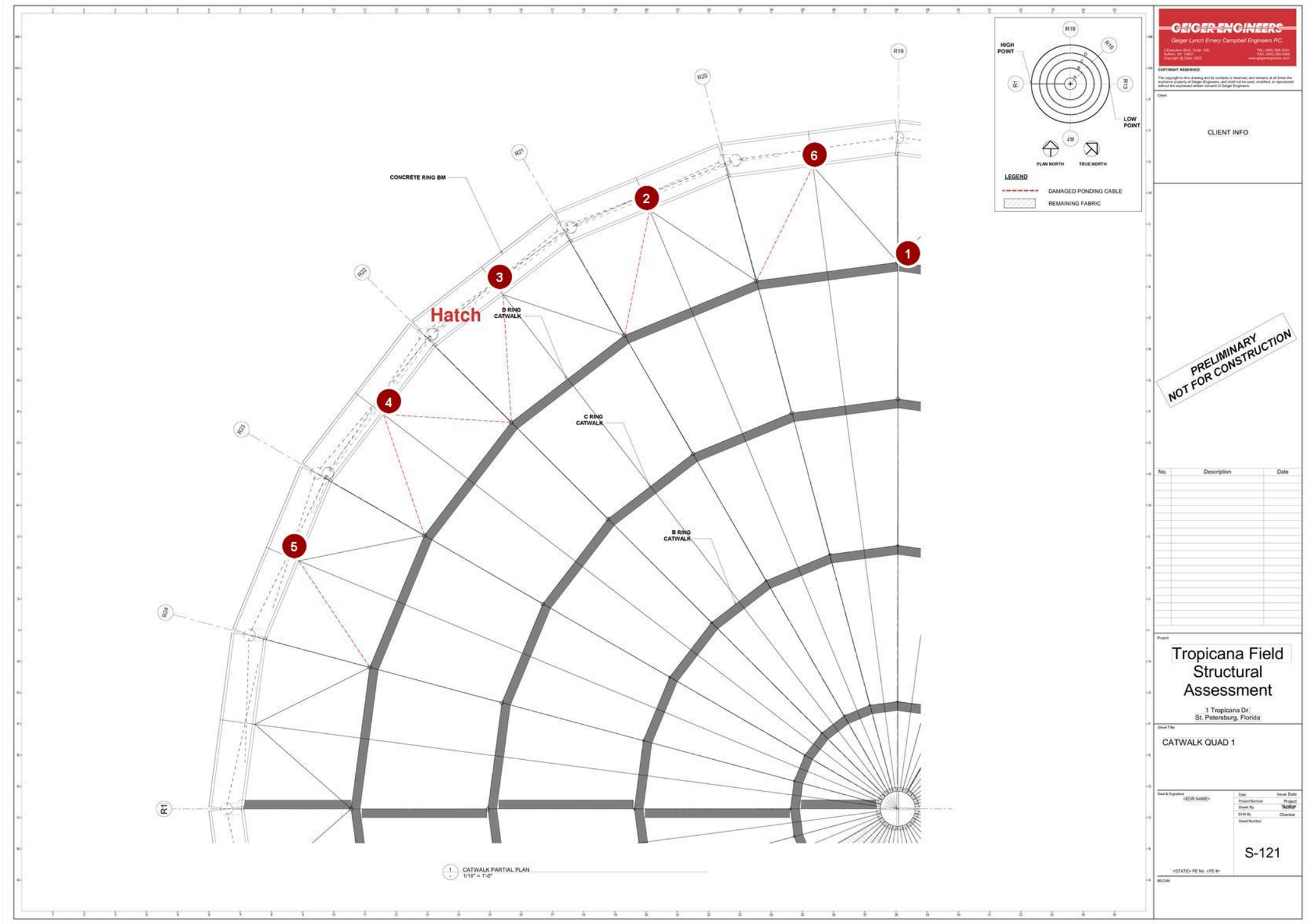

S-121 - CATWALK QUAD 1.pdf -

Draft | Open | Work Completed | Ready to Inspect | Closed | Not Approved | In Dispute

Pin	Issue ID	Description	Location Detail	Status	Company	Type	Date Created	Due Date
1	000041	Ponding cable failure.		Open	<not set>	Issue - Cables	22 Oct 2024	



2024-10-22 11:30:52

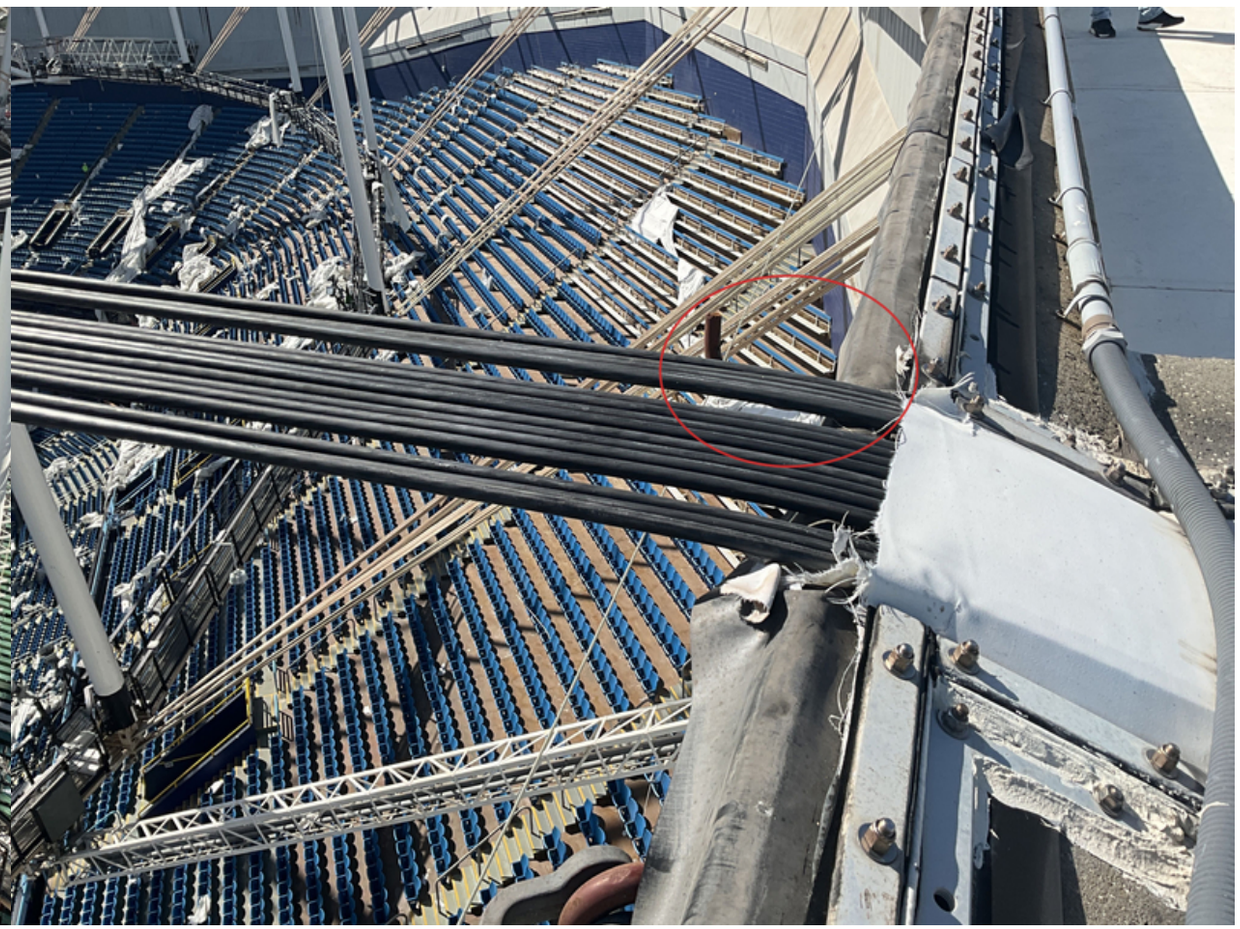

2024-10-22 11:30:40

End of 000041 images

Issues - Cables

Pin	Issue ID	Description	Location Detail	Status	Company	Type	Date Created	Due Date
2	000042	Ponding cable failure.		Open	<not set>	Issue - Cables	22 Oct 2024	

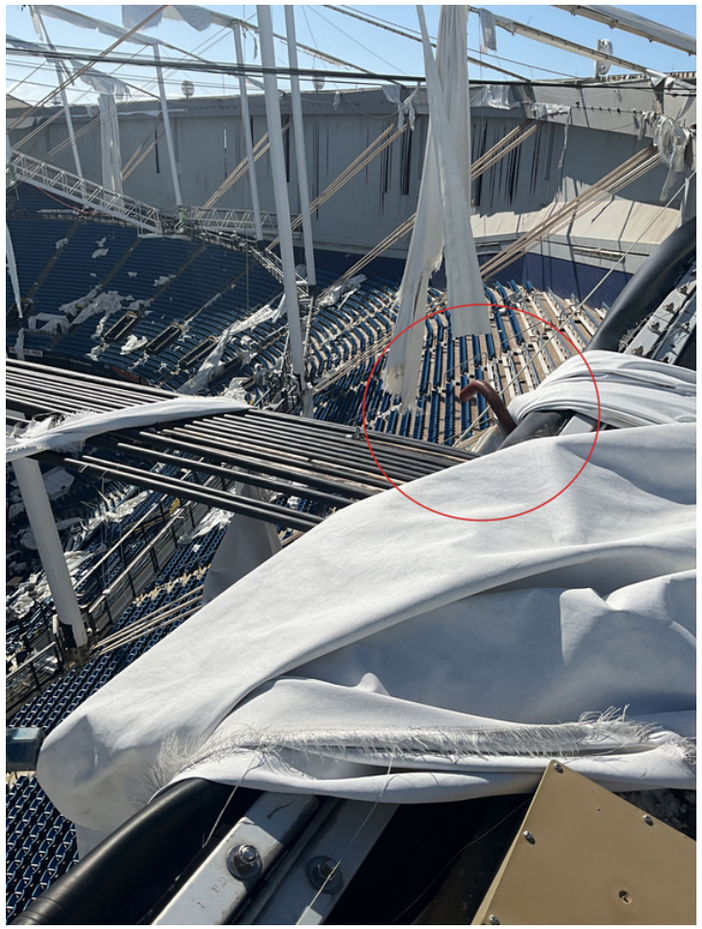

2024-10-22 11:32:31

End of 000042 images

Issues - Cables

Pin	Issue ID	Description	Location Detail	Status	Company	Type	Date Created	Due Date
3	000043	Ponding cable failure		Open	<not set>	Issue - Cables	22 Oct 2024	



2024-10-22 11:34:04

End of 000043 images

Pin	Issue ID	Description	Location Detail	Status	Company	Type	Date Created	Due Date
4	000045	Ponding cable failure.		Open	<not set>	Issue - Cables	22 Oct 2024	



2024-10-22 11:36:21

End of 000045 images

Issues - Cables

Pin	Issue ID	Description	Location Detail	Status	Company	Type	Date Created	Due Date
5	000046	Ponding cable failure.		Open	<not set>	Issue - Cables	22 Oct 2024	



2024-10-22 11:39:28

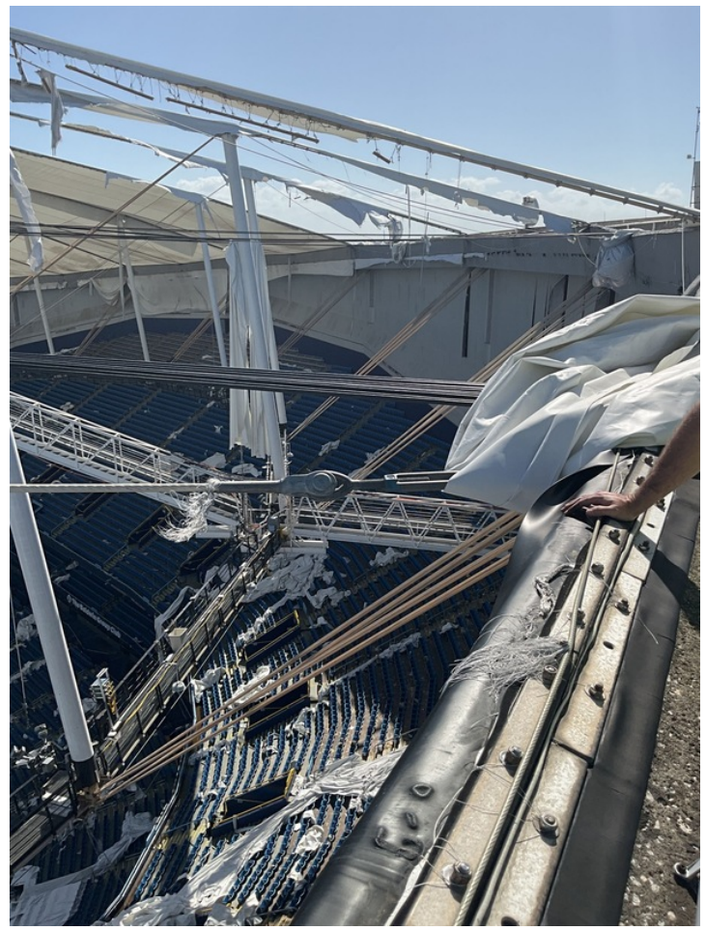

2024-10-22 11:38:28

Pin	Issue ID	Description	Location Detail	Status	Company	Type	Date Created	Due Date

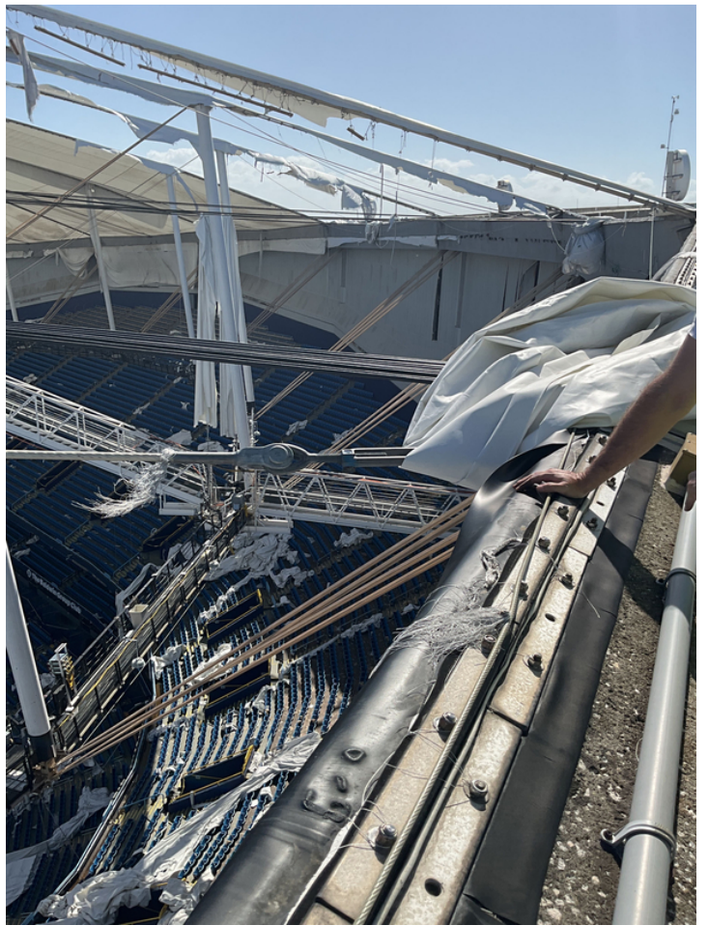

2024-10-22 11:38:25



2024-10-22 11:38:22 Failed ponding cables draped over in tact cable

End of 000046 images

Issues - Cables

Pin	Issue ID	Description	Location Detail	Status	Company	Type	Date Created	Due Date
6	000072	Ponding cable fail		Open	<not set>	Issue - Cables	23 Oct 2024	



2024-10-23 09:32:39

End of 000072 images

Pin	Issue ID	Description	Location Detail	Status	Company	Type	Date Created	Due Date

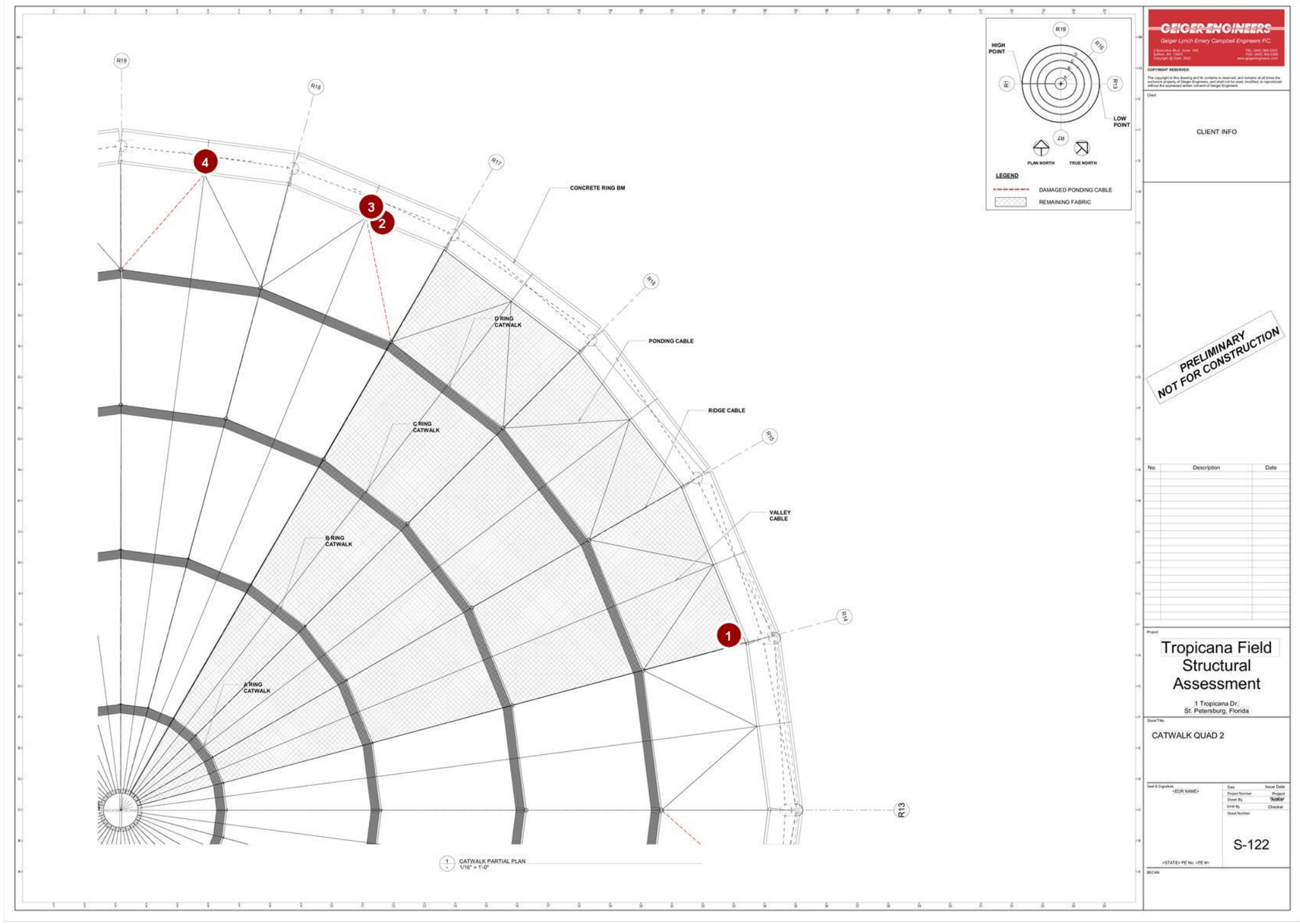

S-122 - CATWALK QUAD 2.pdf -

Draft	Open	Work Completed	Ready to Inspect	Closed	Not Approved	In Dispute

1	000035	Ridge Cable corrosion		Open	<not set>	Issue - Cables	22 Oct 2024

Pin	Issue ID	Description	Location Detail	Status	Company	Type	Date Created	Due Date



2024-10-22 11:10:33



2024-10-22 11:09:49

End of 000035 images

Pin	Issue ID	Description	Location Detail	Status	Company	Type	Date Created	Due Date
2	000037	Ponding cable failure.		Open	<not set>	Issue - Cables	22 Oct 2024	



2024-10-22 11:22:40

End of 000037 images

Issues - Cables

Pin	Issue ID	Description	Location Detail	Status	Company	Type	Date Created	Due Date
3	000038	Ponding cable failure.		Open	<not set>	Issue - Cables	22 Oct 2024	

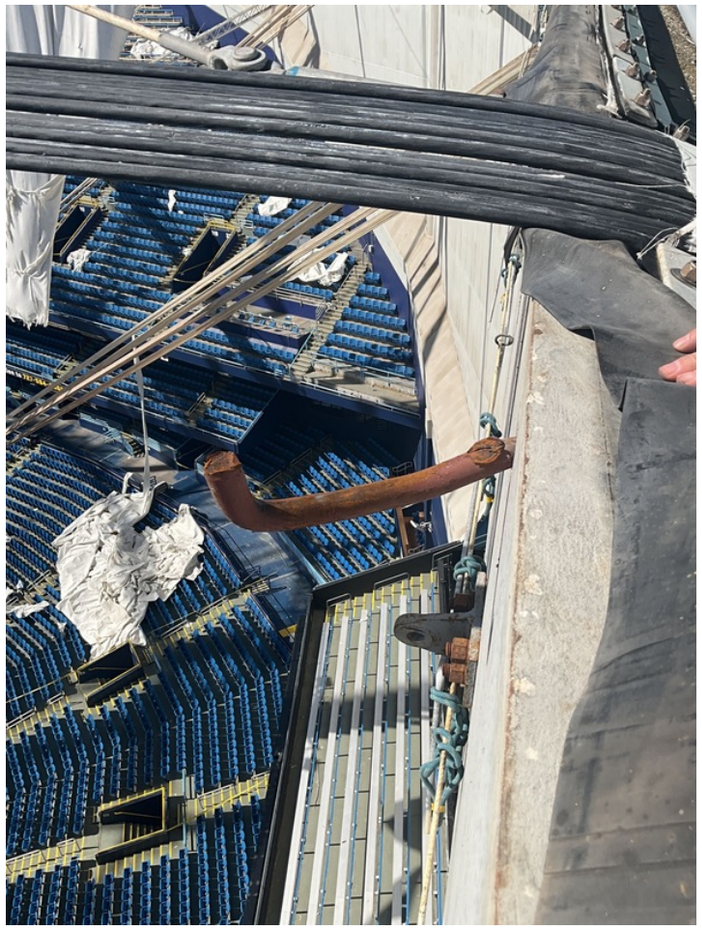

2024-10-22 11:24:04



2024-10-22 11:23:22

Pin	Issue ID	Description	Location Detail	Status	Company	Type	Date Created	Due Date

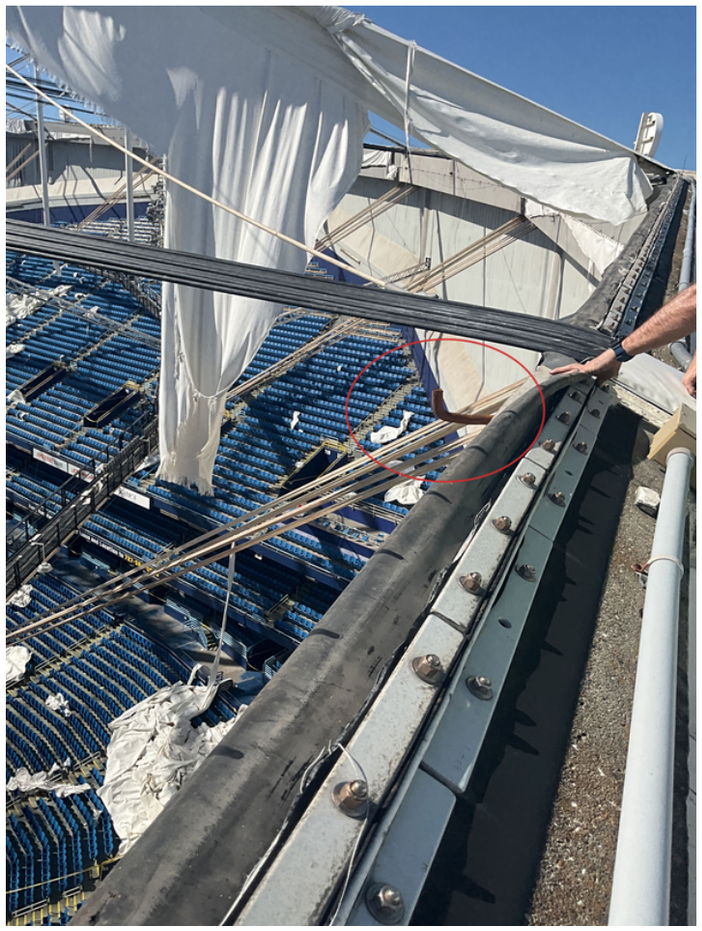

2024-10-22 11:23:14

End of 000038 images

Pin	Issue ID	Description	Location Detail	Status	Company	Type	Date Created	Due Date
4	000039	Ponding cable failure.		Open	<not set>	Issue - Cables	22 Oct 2024	



2024-10-22 11:28:33



2024-10-22 11:26:47

End of 000039 images

Pin	Issue ID	Description	Location Detail	Status	Company	Type	Date Created	Due Date

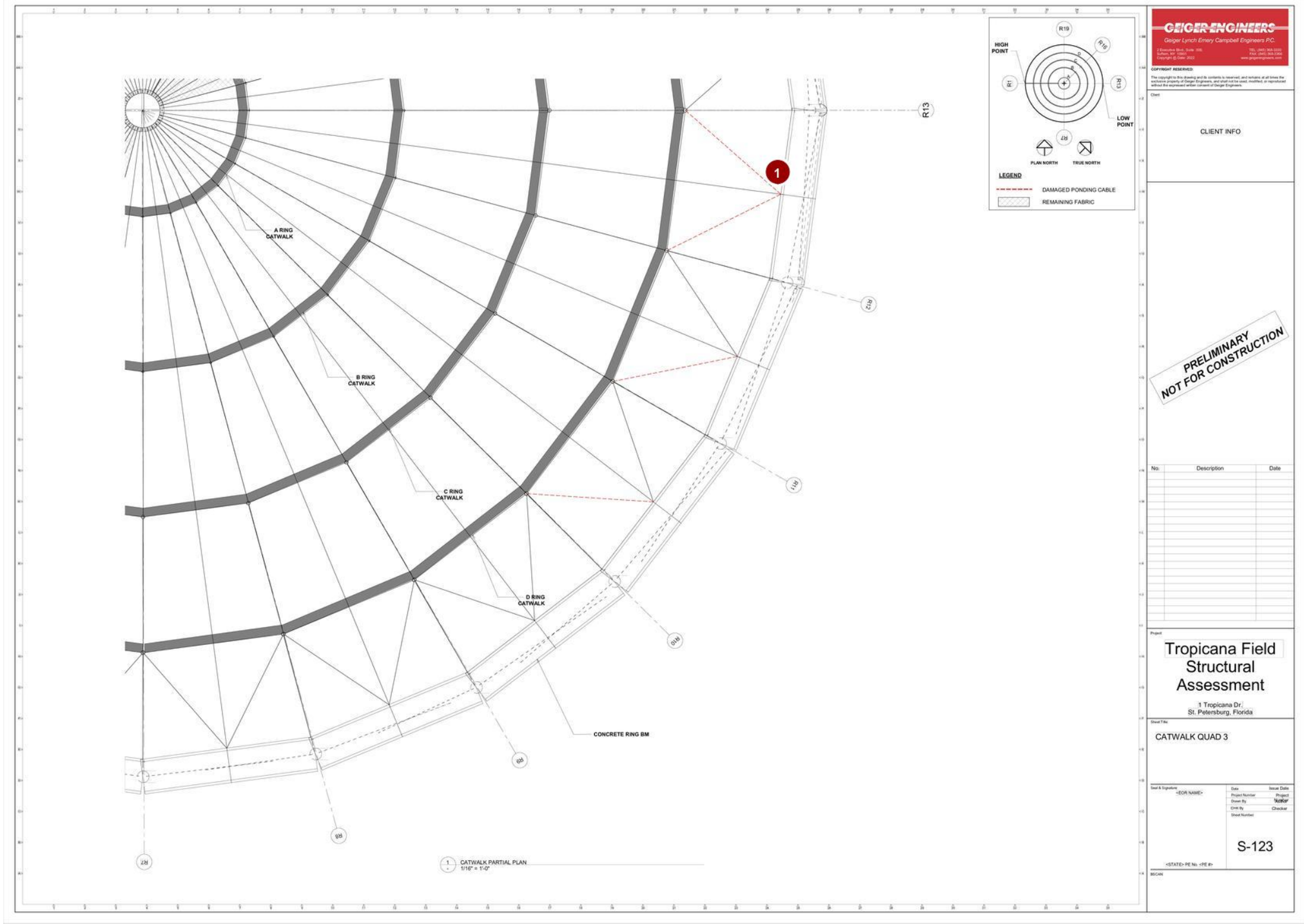

S-123 - CATWALK QUAD 3.pdf

Draft	Open	Work Completed	Ready to Inspect	Closed	Not Approved	In Dispute

1	000032	Ponding cable anchor fail		Open	<not set>	Issue - Cables	22 Oct 2024	

Issues - Cables

Pin	Issue ID	Description	Location Detail	Status	Company	Type	Date Created	Due Date

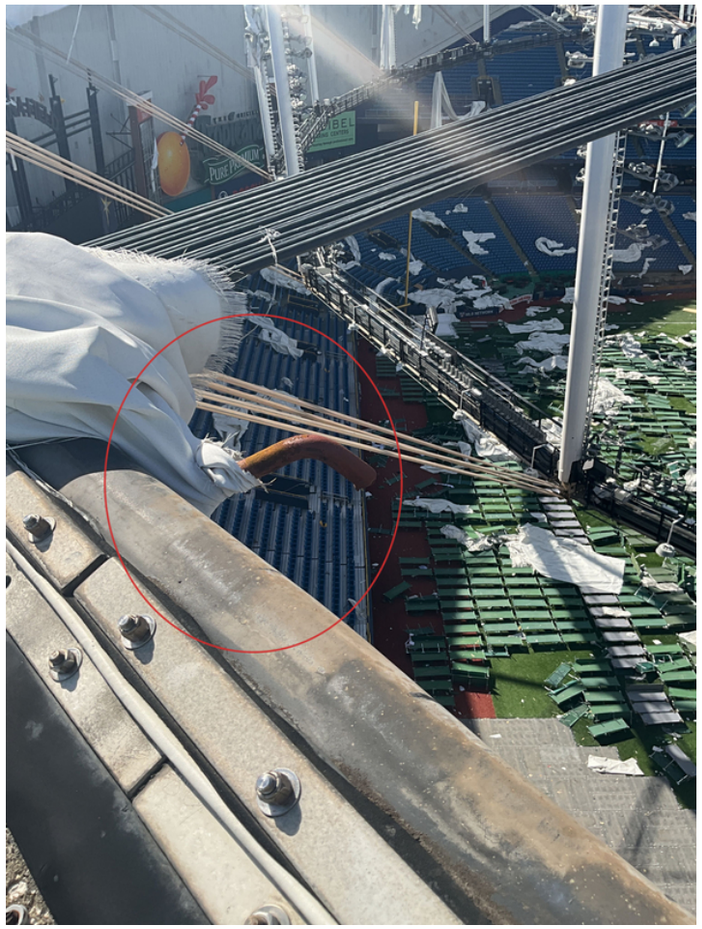

2024-10-22 11:03:32



2024-10-22 11:02:58

Issues - Cables

Pin	Issue ID	Description	Location Detail	Status	Company	Type	Date Created	Due Date

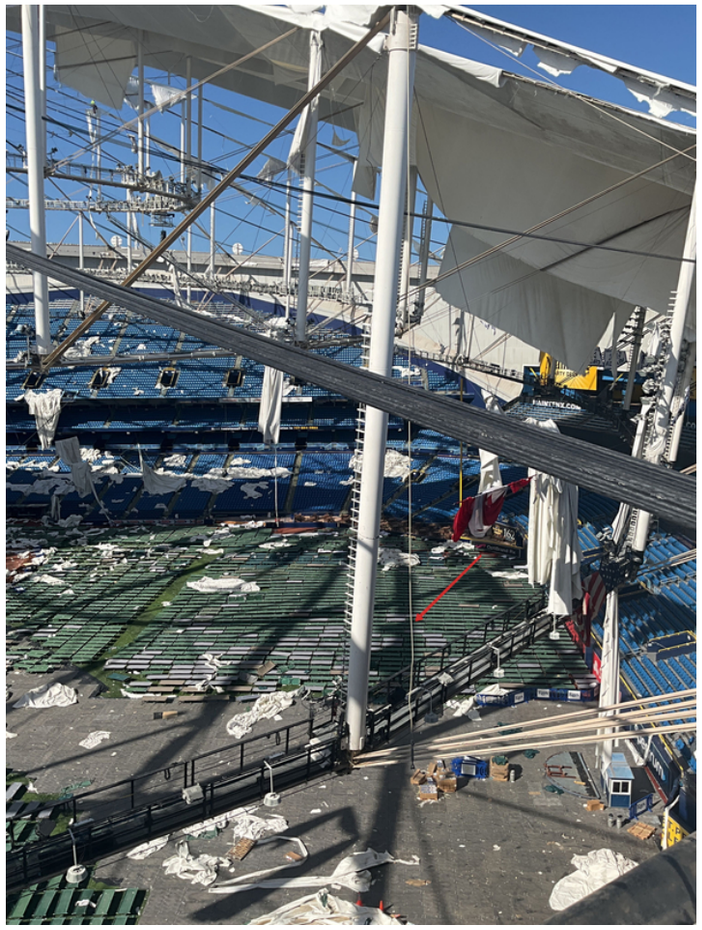

2024-10-22 11:02:55



2024-10-22 11:02:51

Pin	Issue ID	Description	Location Detail	Status	Company	Type	Date Created	Due Date



2024-10-22 11:02:43

End of 000032 images

Pin	Issue ID	Description	Location Detail	Status	Company	Type	Date Created	Due Date

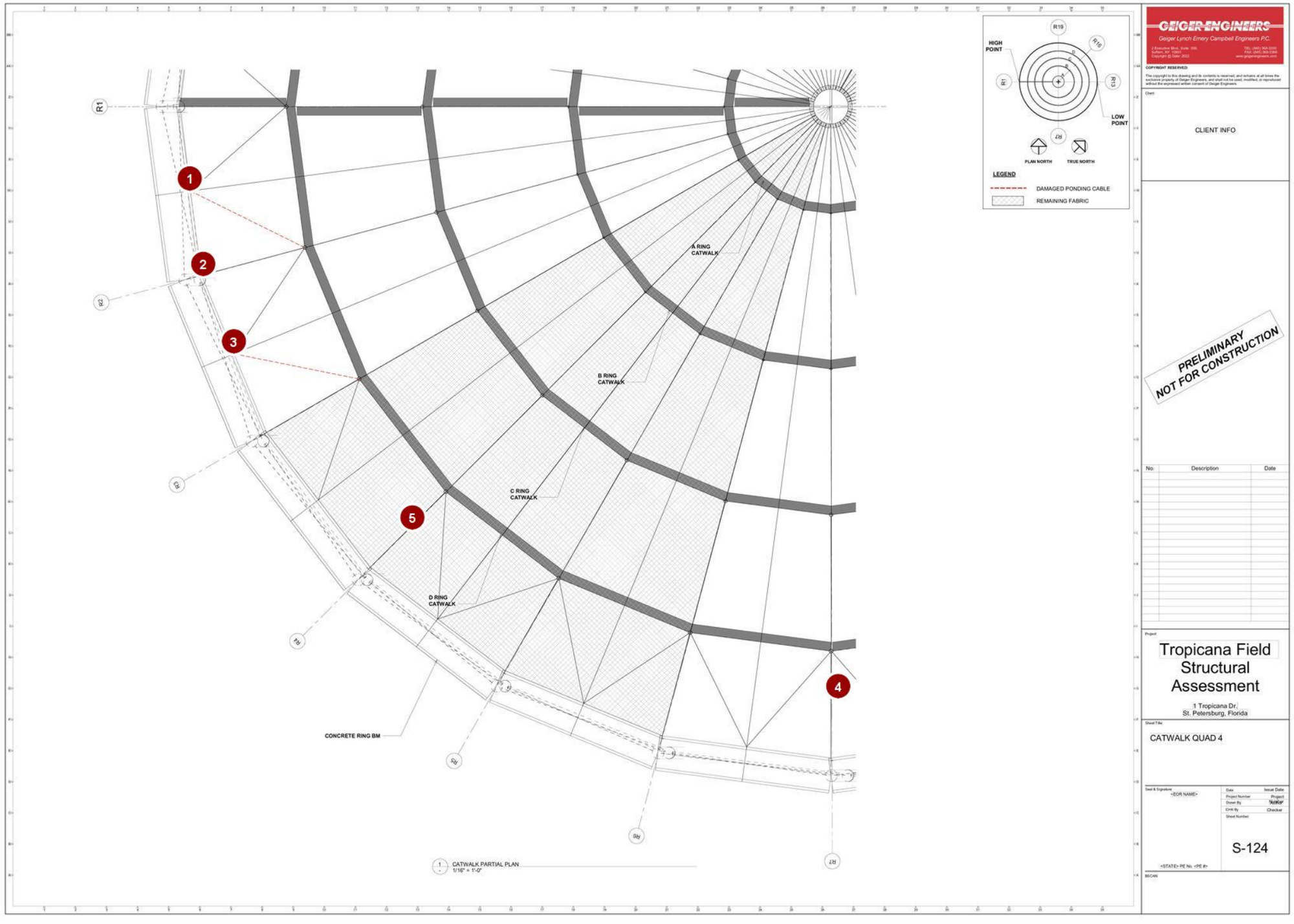

S-124 - CATWALK QUAD 4.pdf -

Draft	Open	Work Completed	Ready to Inspect	Closed	Not Approved	In Dispute

1	000049	Ponding cable fail	Open	<not set>	Issue - Cables	22 Oct 2024	

Issues - Cables

Pin	Issue ID	Description	Location Detail	Status	Company	Type	Date Created	Due Date



2024-10-22 11:42:13

End of 000049 images

Issues - Cables

Pin	Issue ID	Description	Location Detail	Status	Company	Type	Date Created	Due Date
2	000050	Ridge jacket fail		Open	<not set>	Issue - Cables	22 Oct 2024	



2024-10-23 09:02:57

End of 000050 images

Pin	Issue ID	Description	Location Detail	Status	Company	Type	Date Created	Due Date
3	000051	Ponding cable failure.		Open	<not set>	Issue - Cables	22 Oct 2024	



2024-10-22 11:44:58

End of 000051 images

Pin	Issue ID	Description	Location Detail	Status	Company	Type	Date Created	Due Date
4	000068	Sleeve of diagonal cable has become unsheathed. Coating needs to be replaced or cable will corrode.		Open	<not set>	Issue - Cables	22 Oct 2024	



2024-10-22 15:33:43

End of 000068 images

Pin	Issue ID	Description	Location Detail	Status	Company	Type	Date Created	Due Date
5	000078	Diagonal cable jacket failure. Conditions appears to have existing pre-hurricane.		Open	<not set>	Issue - Cables	23 Oct 2024	



2024-10-23 12:30:45

End of 000078 images

Pin	Issue ID	Description	Location Detail	Status	Company	Type	Date Created	Due Date

CATWALK (5 issues)

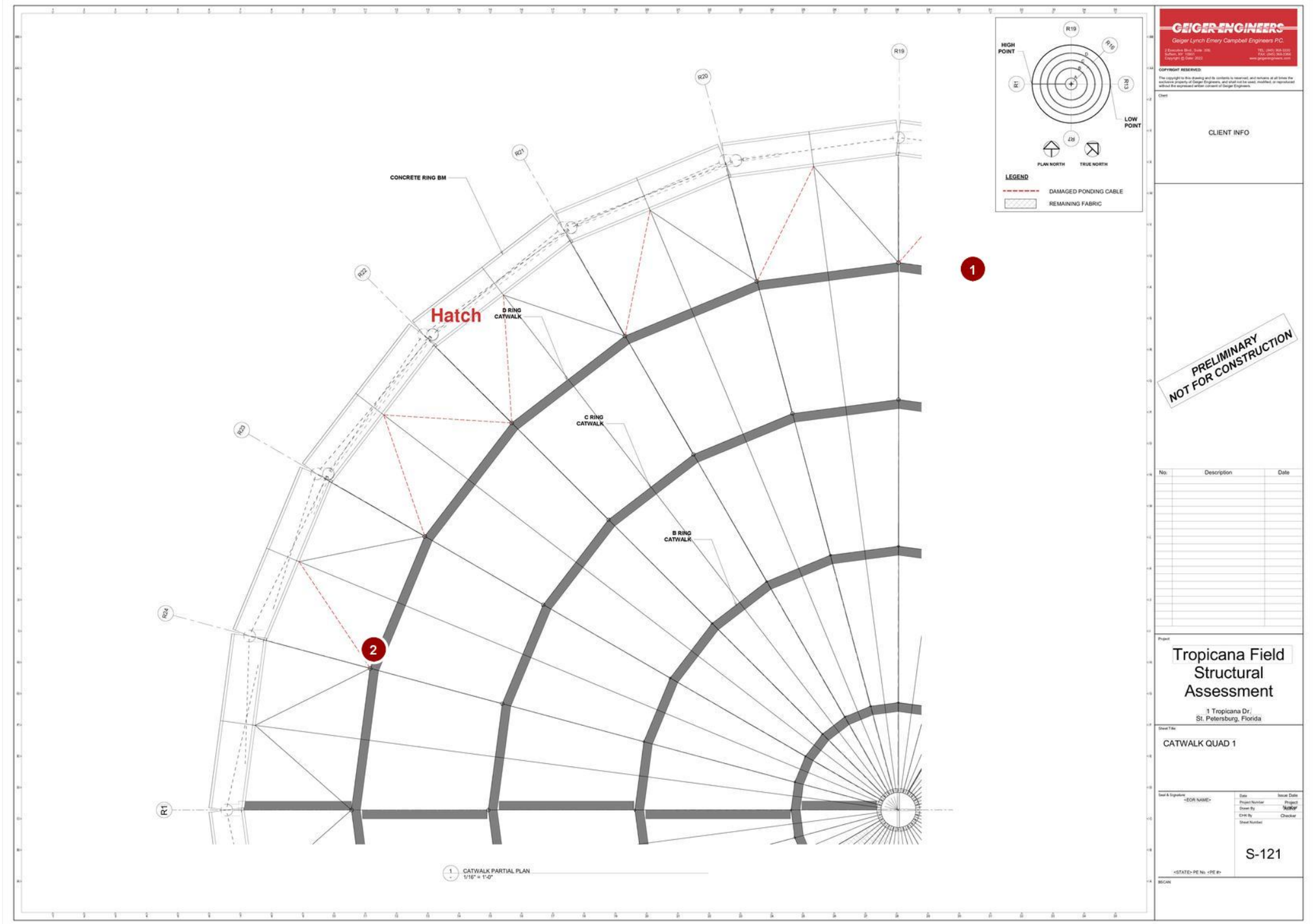

S-121 - CATWALK QUAD 1.pdf -

Draft · Open · Work Completed · Ready to Inspect · Closed · Not Approved · In Dispute

Pin	Issue ID	Description	Location Detail	Status	Company	Type	Date Created	Due Date
1	000059	Strut paint damage		Open	<not set>	Issue - Steel	22 Oct 2024	



2024-10-22 14:43:52

End of 000059 images

Pin	Issue ID	Description	Location Detail	Status	Company	Type	Date Created	Due Date
2	000070	Chipped paint		Open	<not set>	Issue - Steel	23 Oct 2024	

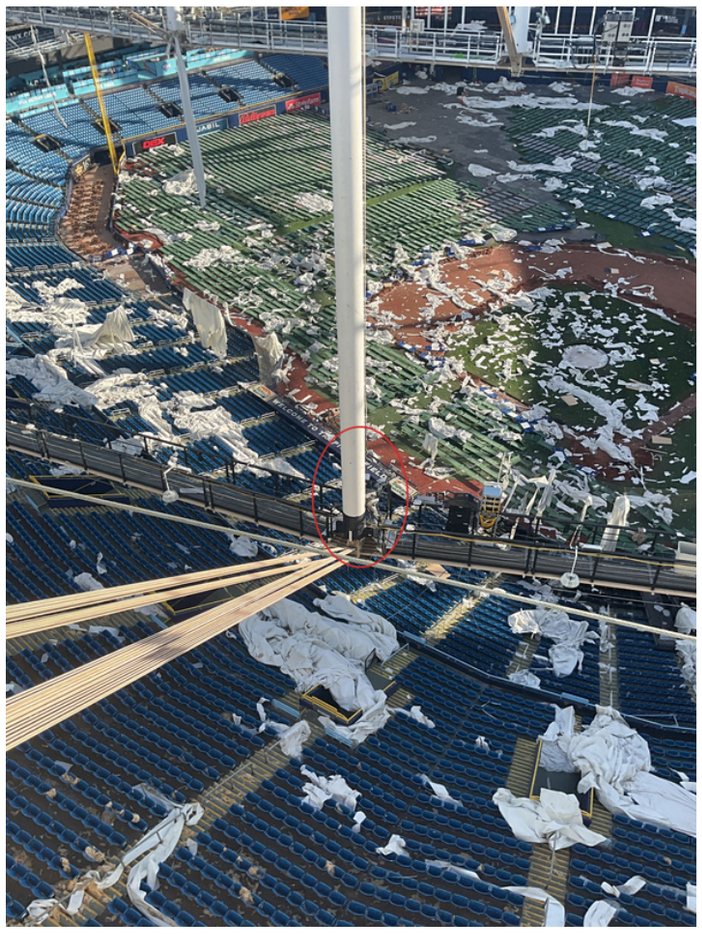

2024-10-23 09:14:59

End of 000070 images

Pin	Issue ID	Description	Location Detail	Status	Company	Type	Date Created	Due Date

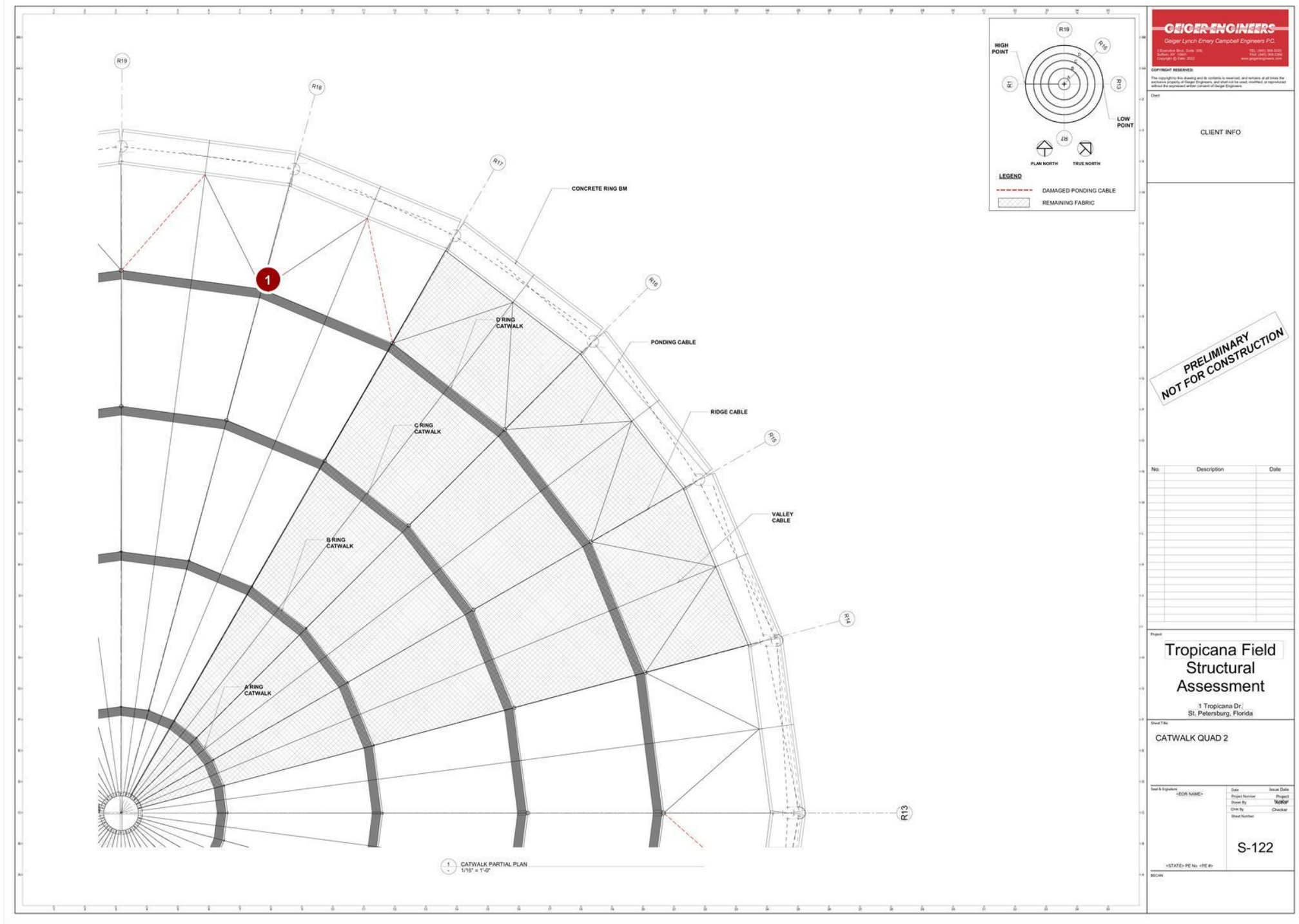

S-122 - CATWALK QUAD 2.pdf -

Draft	Open	Work Completed	Ready to Inspect	Closed	Not Approved	In Dispute

1	000073	Paint failure		Open	<not set>	Issue - Steel	23 Oct 2024

Pin	Issue ID	Description	Location Detail	Status	Company	Type	Date Created	Due Date

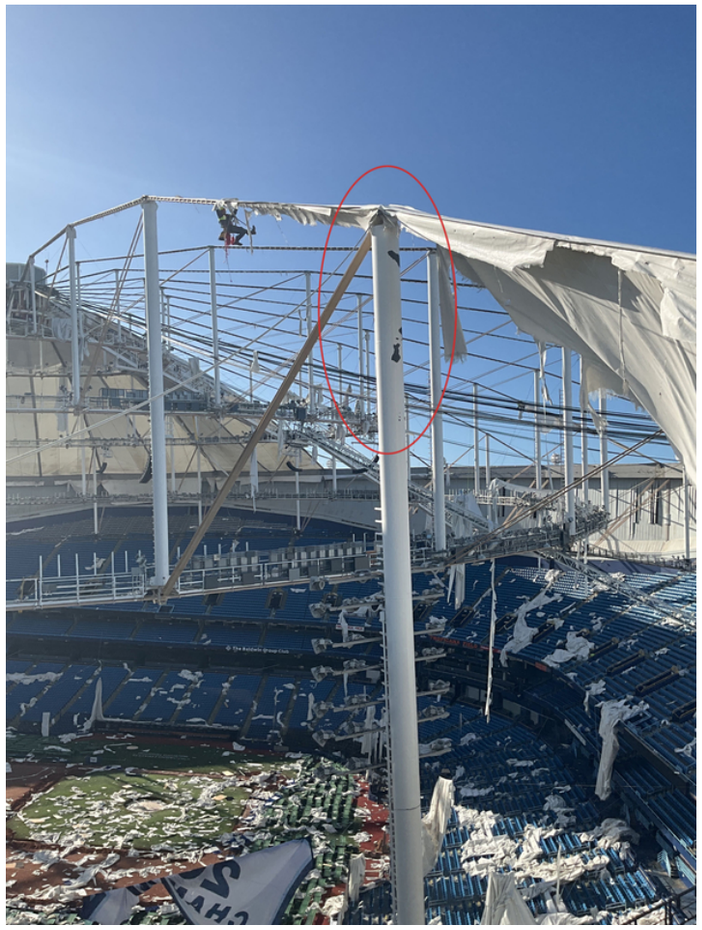

2024-10-23 09:39:59

End of 000073 images

Pin	Issue ID	Description	Location Detail	Status	Company	Type	Date Created	Due Date

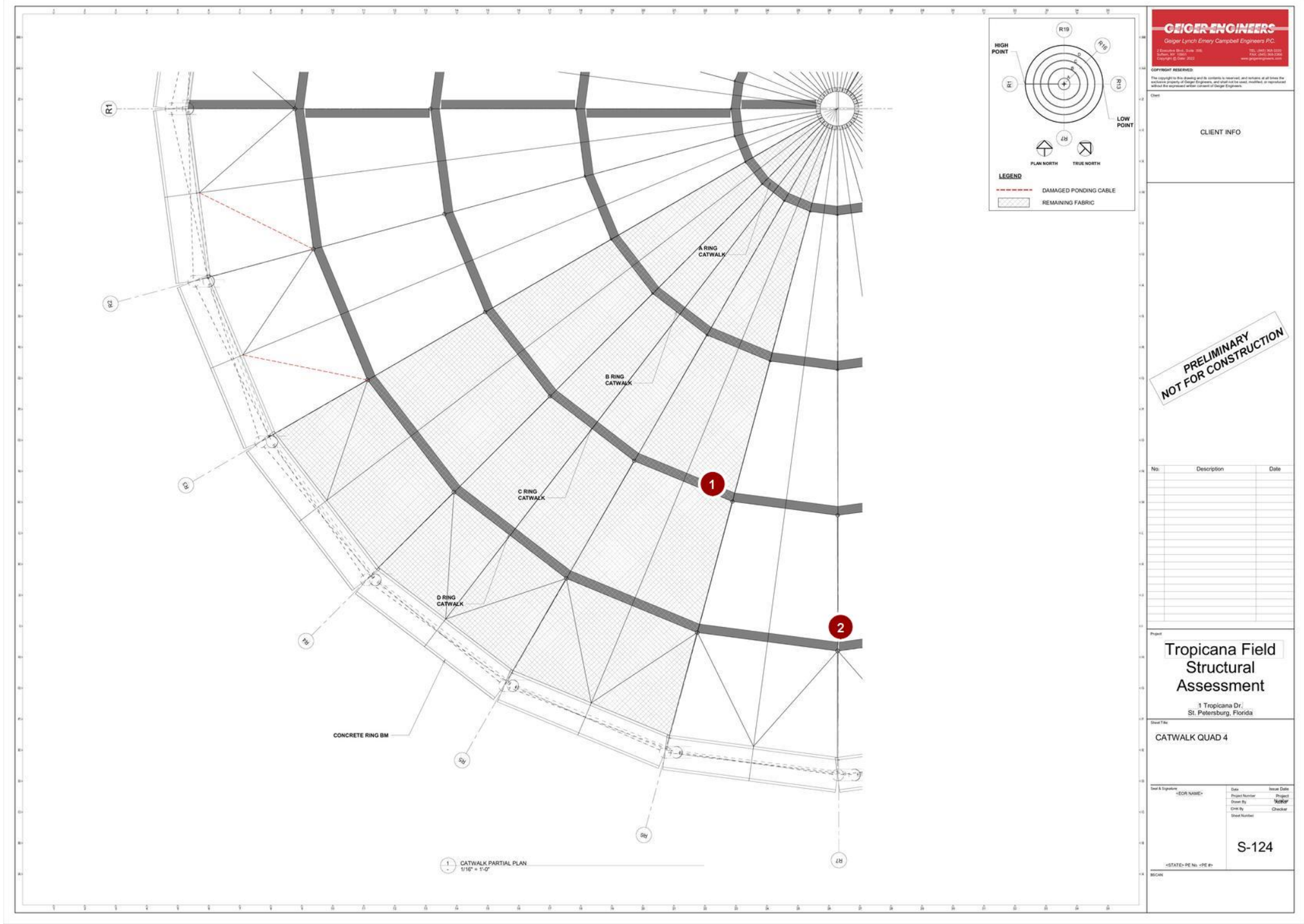

S-124 - CATWALK QUAD 4.pdf -

Draft · Open · Work Completed · Ready to Inspect · Closed · Not Approved · In Dispute

Pin	Issue ID	Description	Location Detail	Status	Company	Type	Date Created	Due Date
1	000079	Conduit truss hanging by single threaded rod. Note truss has safety cables in case rod fails.		Open	<not set>	Issue - Steel	23 Oct 2024	

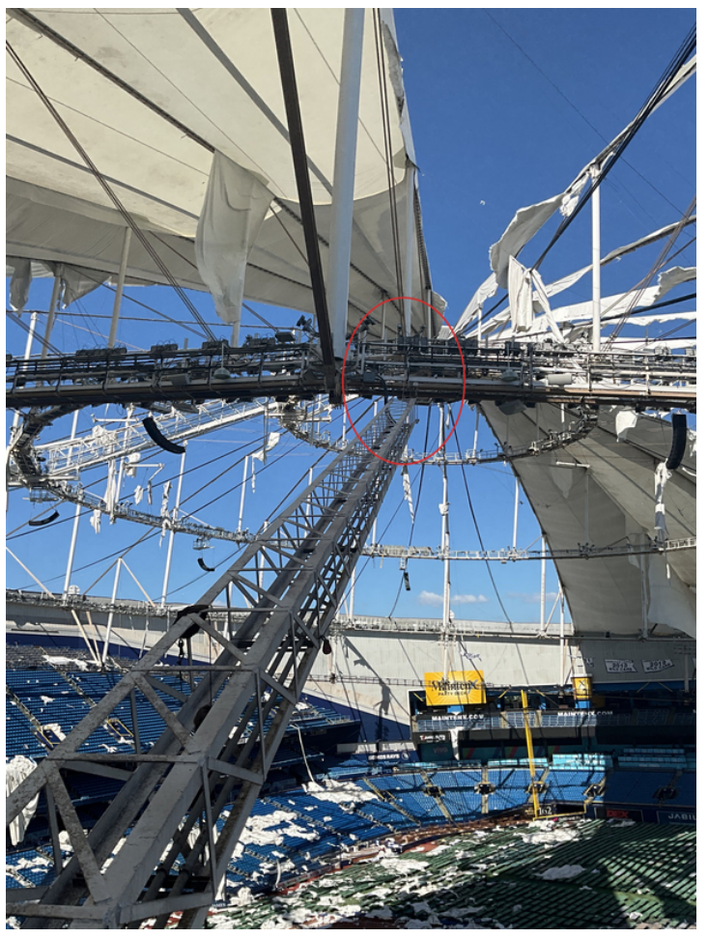

2024-10-23 12:37:43

End of 000079 images

Pin	Issue ID	Description	Location Detail	Status	Company	Type	Date Created	Due Date
2	000080	Backstop rigging is questionable.		Open	<not set>	Issue - Steel	23 Oct 2024	



2024-10-23 12:39:01

End of 000080 images

Tropicana Field Structural Assessment

Issues - Cladding

Pin	Issue ID	Description	Location Detail	Status	Company	Type	Date Created	Due Date

EXTERIOR (9 issues)

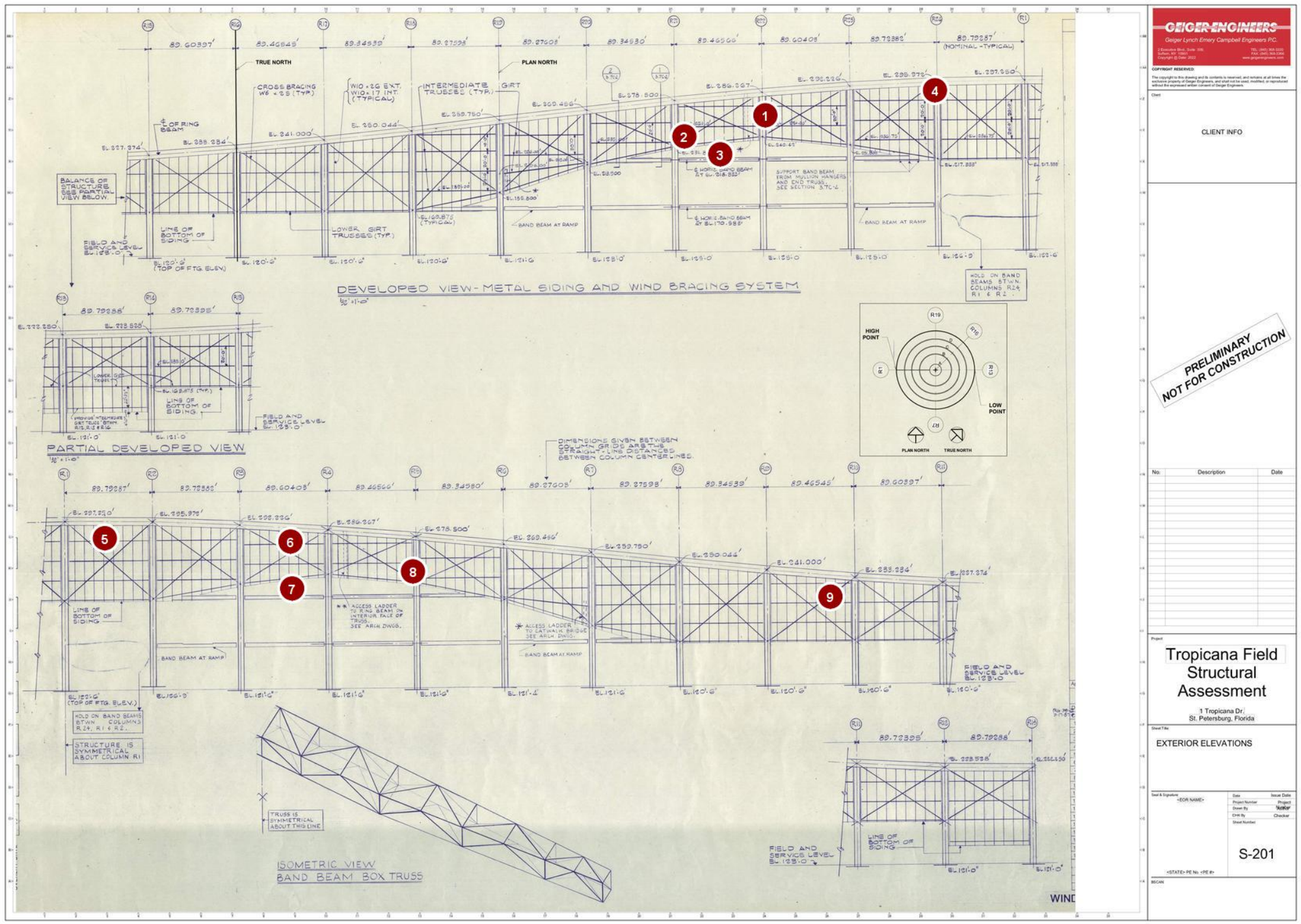

S-201 - EXTERIOR ELEVATIONS.pdf

● Draft ● Open ● Work Completed ● Ready to Inspect ● Closed ● Not Approved ● In Dispute

Issues - Cladding

Pin	Issue ID	Description	Location Detail	Status	Company	Type	Date Created	Due Date
1	000004	Damaged cladding panels.		Open	<not set>	Issue - Cladding	22 Oct 2024	



2024-10-22 09:21:36



2024-10-22 09:21:33

End of 000004 images

Issues - Cladding

Pin	Issue ID	Description	Location Detail	Status	Company	Type	Date Created	Due Date
2	000005	Damaged cladding panels.		Open	<not set>	Issue - Cladding	22 Oct 2024	



2024-10-22 09:23:27

End of 000005 images

Pin	Issue ID	Description	Location Detail	Status	Company	Type	Date Created	Due Date
3	000006	Band beam cladding failure.		Open	<not set>	Issue - Cladding	22 Oct 2024	



2024-10-22 09:27:42

End of 000006 images

Pin	Issue ID	Description	Location Detail	Status	Company	Type	Date Created	Due Date
4	000008	Facade failure		Open	<not set>	Issue - Cladding	22 Oct 2024	



2024-10-22 09:32:27

End of 000008 images

Pin	Issue ID	Description	Location Detail	Status	Company	Type	Date Created	Due Date
5	000009	Facade failure		Open	<not set>	Issue - Cladding	22 Oct 2024	



2024-10-22 09:33:42



2024-10-22 09:33:38

End of 000009 images

Pin	Issue ID	Description	Location Detail	Status	Company	Type	Date Created	Due Date
6	000010	Facade failure		Open	<not set>	Issue - Cladding	22 Oct 2024	

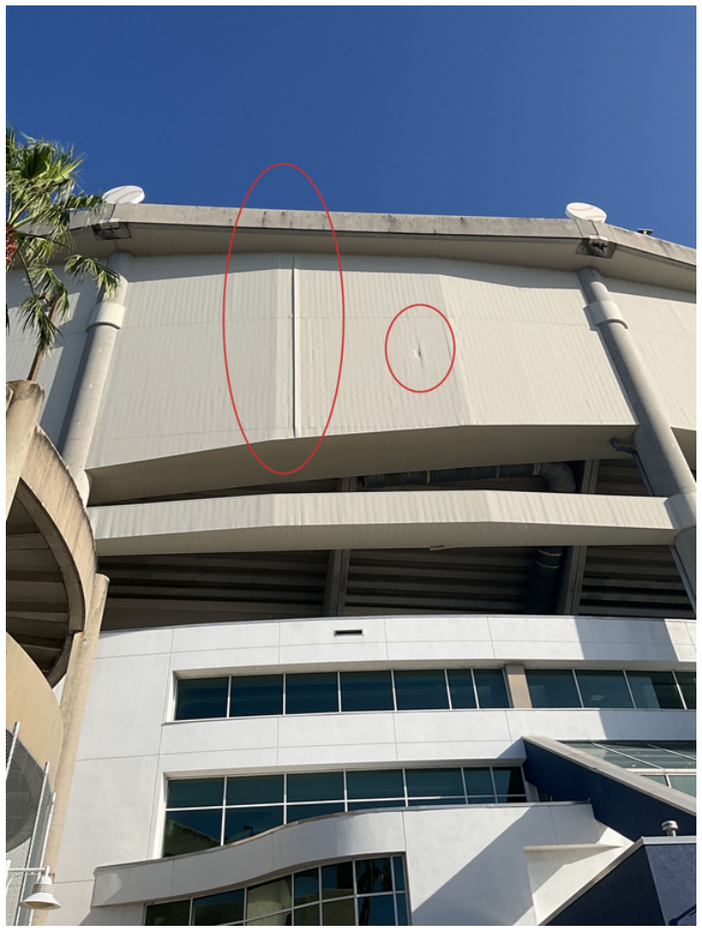

2024-10-22 09:37:46

End of 000010 images

Pin	Issue ID	Description	Location Detail	Status	Company	Type	Date Created	Due Date
7	000011	Band beam cladding failure		Open	<not set>	Issue - Cladding	22 Oct 2024	



2024-10-22 09:38:13

End of 000011 images

Pin	Issue ID	Description	Location Detail	Status	Company	Type	Date Created	Due Date
8	000012	Facade failure		Open	<not set>	Issue - Cladding	22 Oct 2024	



2024-10-22 09:39:32

End of 000012 images

Pin	Issue ID	Description	Location Detail	Status	Company	Type	Date Created	Due Date
9	000017	Facade failure		Open	<not set>	Issue - Cladding	22 Oct 2024	



2024-10-22 09:46:10

End of 000017 images

Appendix 2 – Roof Structural Drawings

DWG #	DWG NAME	DATE
3.1C-1	ROOF OUTER FABRIC MEMBRANE & UPPER CABLE PLAN	9.10.87
3.1C-2	ROOF LOWER CABLE PLAN	9.10.87
3.1D-1	ROOF SECTIONS	9.10.87
3.1E-1	CONCEPTUAL FABRIC DETAILS	9.10.87
3.7B-1	COMPRESSION RING BEAM PART PLAN, SECTIONS & DETAILS	3.26.86
3.7B-2	COMPRESSION RING BEAM PART PLAN, SECTIONS & DETAILS	3.26.86
3.7B-3	COMPRESSION RING BEAM PART PLAN, SECTIONS & DETAILS	3.26.86
3.7B-4	COMPRESSION RING BEAM PART PLAN, SECTIONS & DETAILS	3.26.86
3.7B-5	COMPRESSION RING BEAM PART PLAN, SECTIONS & DETAILS	3.26.86
3.7C-1	WIND BRACING SYSTEM - ELEVATION	9.10.87
3.7C-2	WIND BRACING SYSTEM - SECTIONS & DETAILS	9.10.87
3.8C-1	RIDGE CABLE FABRIC CLAMP DETAILS	3.17.87
3.8D-1	DETAILS OF CASTINGS	3.26.86
3.8E-1	TYPICAL CABLE TRUSS ASSEMBLY DETAIL	3.26.86
3.8E-2	CABLE TRUSS AT COLUMN LINE R1 ASSEMBLY DETAILS	3.26.86
3.8E-3	CABLE TRUSS AT COLUMN LINE R7 ASSEMBLY DETAILS	3.26.86
3.8E-4	CABLE TRUSS AT COLUMN LINE R19 ASSEMBLY DETAILS	3.26.86
3.8H-1	CATWALK PLAN AND ELEVATION	6.22.87
3.8H-2	HOOP CATWALK & DETAILS	6.22.87
3.8H-3	BRIDGE CATWALK & CONNECTION AT POST	6.22.87
3.8H-4	BRIDGE CATWALK & CONNECTION AT TENSION & COMPRESSION RINGS	6.22.87
3.8H-5	CENTER MECHANICAL ROOM AT TENSION RING	6.22.87

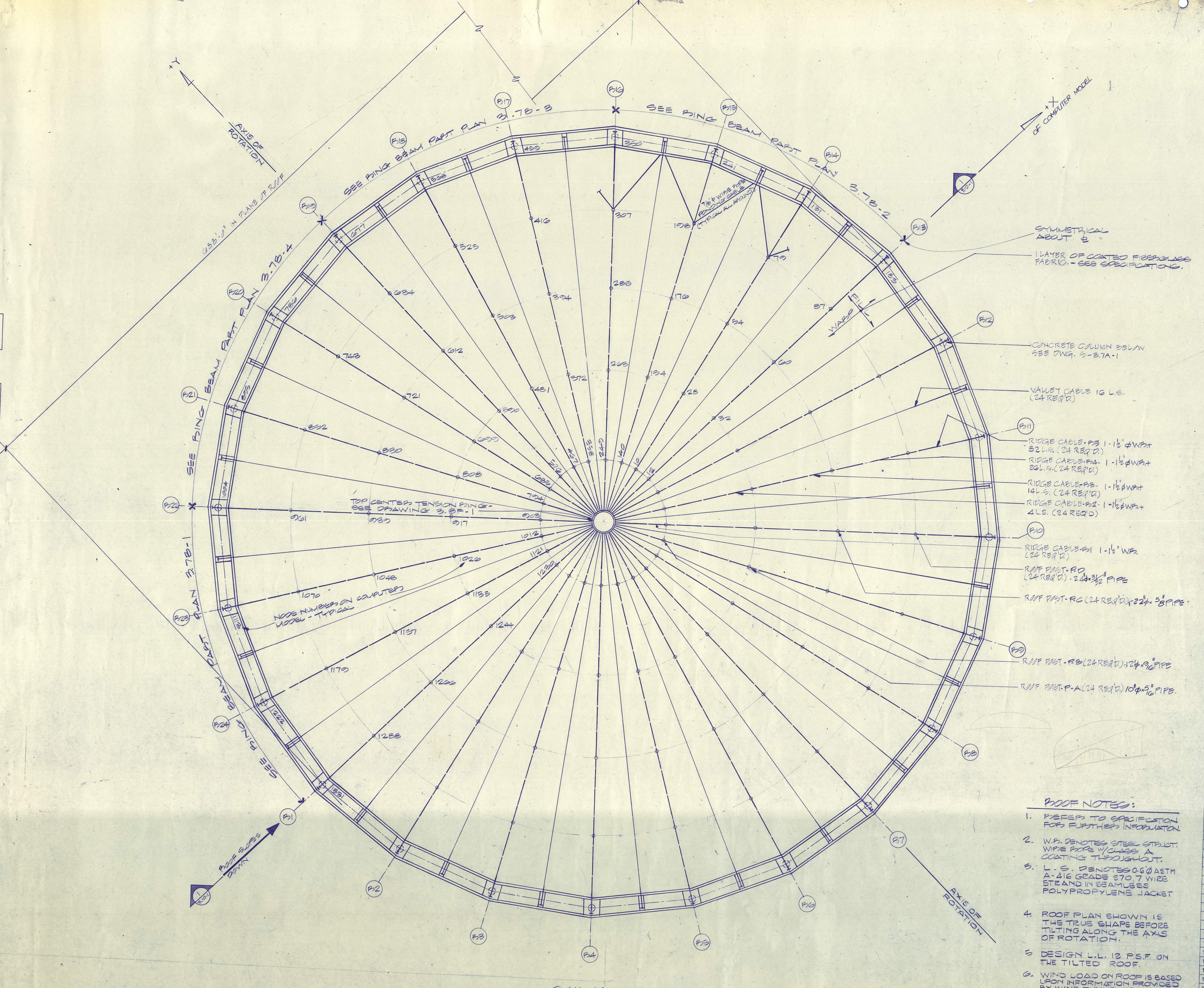

PLAN AT ROOF MEMBRANE
SCALE: 1/32" = 1'-0"

ROOF NOTES:

1. REFER TO SPECIFICATION FOR FURTHER INFORMATION.
2. W.R. DENOTES STEEL STRUCT. WIRE ROPE W/CLASS A COATING THROUGHOUT.
3. L.S. DENOTES 0.6" ϕ ASTM A-416 GRADE 270, 7 WIRE STRAND IN SEAMLESS POLYPROPYLENE JACKET
4. ROOF PLAN SHOWN IS THE TRUE SHAPE BEFORE TILTING ALONG THE AXIS OF ROTATION.
5. DESIGN L.L. 12 P.S.F. ON THE TILTED ROOF.
6. WIND LOAD ON ROOF IS BASED UPON INFORMATION PROVIDED BY WIND TUNNEL TEST.

LEVEL/QUADRANT | TITLE T | GRID | WALL | FINISH | NOTE | OTHER | MECHANICAL | ELECTRICAL | PLUMBING | STRUCTURAL | ACOUSTICAL
OVERLAY DATE 1-18-87

NOTES-LEGEND

KKBNA/PC
ENGINEERS
STRUCTURAL, MECHANICAL, ELECTRICAL, PLUMBING
114 Fifth Avenue
New York, New York 10011 212-242-0900

POST, BUCKLEY, SCHUH & JERNIGAN, INC.
CONSULTING CIVIL ENGINEERS AND PLANNERS
260 First Avenue South
St. Petersburg, Florida 33701 813-446-7275

THE JOINER-ROSE GROUP
CONSULTANTS IN ACOUSTICS
4125 Centurion Way
Dallas, Texas 75234 214-392-7800

HELLMUTH, OBATA & KASSABAUM, INC.
ARCHITECTURE, INTERIORS, PLANNING, GRAPHICS, ENGINEERING
323 WEST EIGHTH STREET
SUITE 700
KANSAS CITY, MISSOURI 64105
816-221-1576

HOK SPORT

KEY PLAN: D C / A B (R1)

THE STADIUM
One Booker Creek Place
St. Petersburg, Pinellas County, Florida

Approval Dates	Owner	Owner Rep.	Contractor	Architect Consult.
DD	11.21.86	11.21.86	11.21.86	11.21.86
CD	9.10.87	9.10.87	9.10.87	9.10.87
1	9.10.87	9.10.87	9.10.87	9.10.87
2				
3				
4				
5				
6				
7				
8				
9				
10				
11				
12				
13				
14				
15				
16				
17				
18				

RECORD SET OCT 30 1989 DATE

Project No. 4008-001

Drawn	Reviewed	Issued
		3.17.87

Revisions

No.	Description	Date
1	CACO #10	9.10.87
2		
3		
4		
5		
6		
7		
8		
9		
10		
11		
12		
13		
14		
15		
16		
17		
18		

Category | Sub-Cat. | Sheet
3.1C-1

ROOF OUTER FABRIC MEMBRANE & UPPER CABLE PLAN

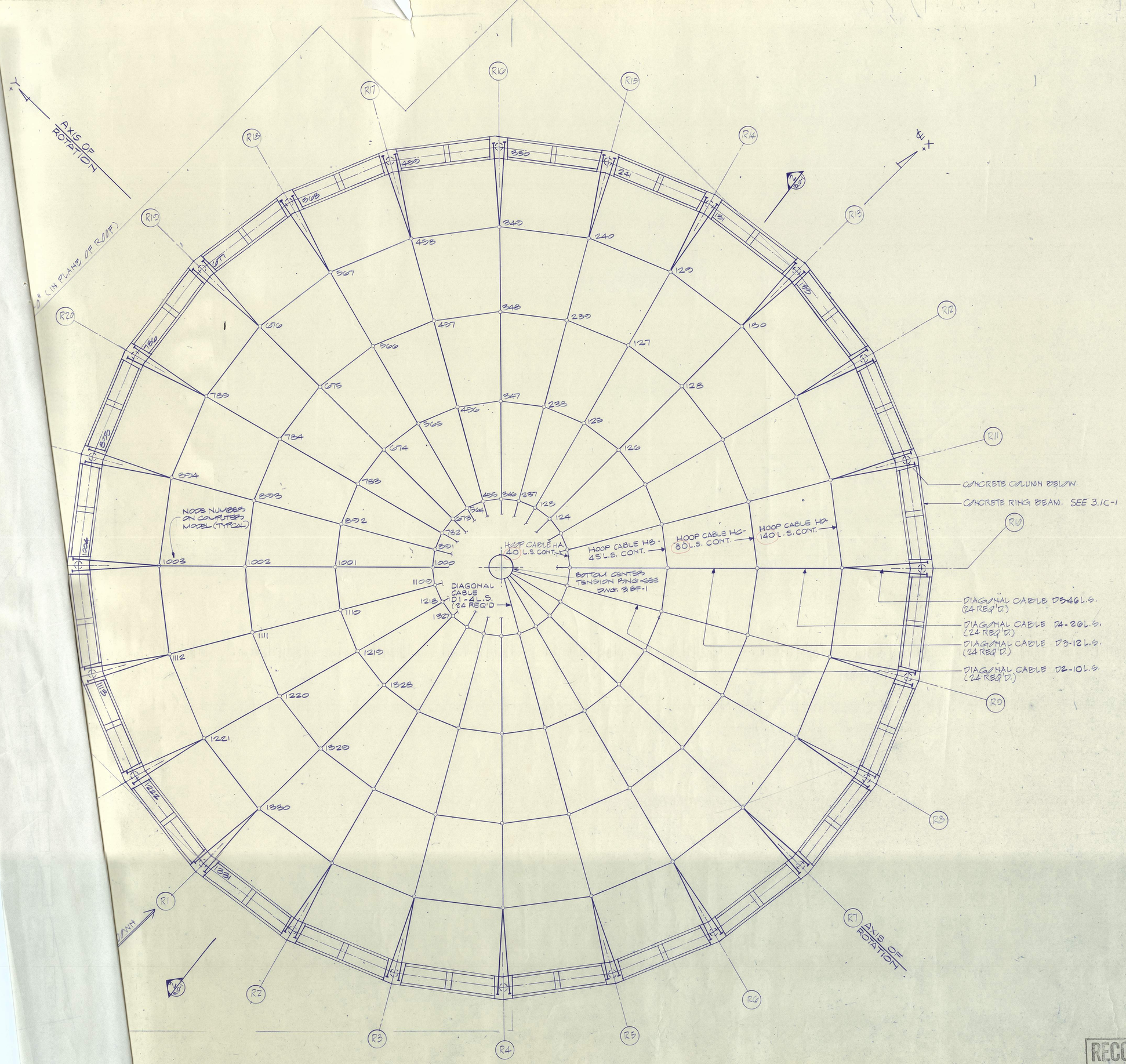

CABLE DOME ROOF - PLAN OF CABLE TRUSS SYSTEM

SCALE: 1/32" = 1'-0"

NOTES-LEGEND

RECORD SET OCT 30 1989 DATE

KKBNA/PC — ENGINEERS
STRUCTURAL, MECHANICAL, ELECTRICAL, PLUMBING
11 West 19th Street — 212-242-0900
New York, New York 10011

POST, BUCKLEY, SCHUH & JERNIGAN, INC.
CONSULTING CIVIL ENGINEERS AND PLANNERS
260 First Avenue South — 813-446-7275
St. Petersburg, Florida 33701

THE JOINER-ROSE GROUP
CONSULTANTS IN ACOUSTICS
4125 Centurion Way — 214-392-7800
Dallas, Texas 75234

HELLMUTH, OBATA & KASSABAUM, INC.
ARCHITECTURE, INTERIORS, PLANNING, GRAPHICS, ENGINEERING
323 WEST EIGHTH STREET — 816-221-1576
KANSAS CITY, MISSOURI 64105

HOK SPORT

KEY PLAN

THE STADIUM
One Booker Creek Place
St. Petersburg, Pinellas County, Florida

Approval Dates	Owner	Owner Rep.	Contractor	Architect Consult.
DD	11-21-86	11-21-86	11-21-86	11-21-86
CD	9-10-87	9-10-87	9-10-87	9-10-87
1	9-10-87	9-10-87	9-10-87	9-10-87
2				
3				
4				
5				
6				
7				
8				
9				
10				
11				
12				
13				
14				
15				
16				
17				
18				

Project No. 4008-001

Drawn	Reviewed	Issued
		3-17-87

Revisions

No.	Description	Date
1	CACO #10	9-10-87
2		
3		
4		
5		
6		
7		
8		
9		
10		
11		
12		
13		
14		
15		
16		
17		
18		

Category	Sub-Cat.	Sheet
		3.1C-2

ROOF LOWER CABLE PLAN

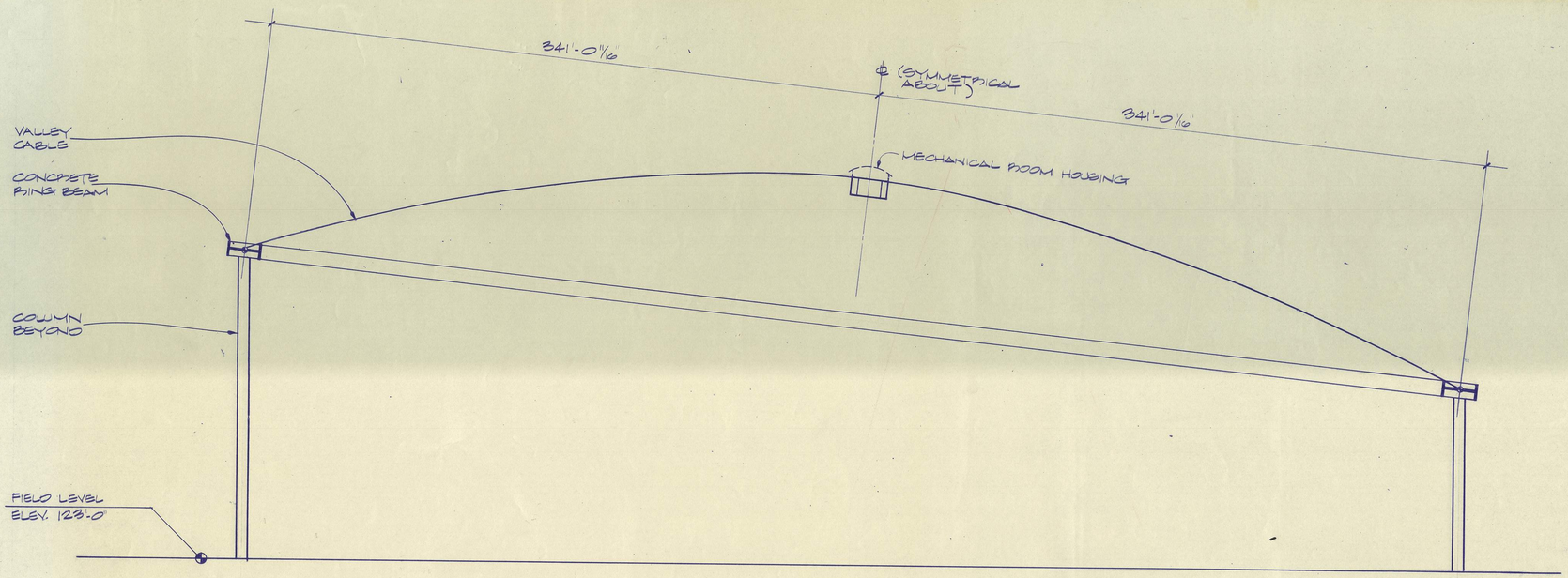

SECTION 1
1/32" = 1'-0"

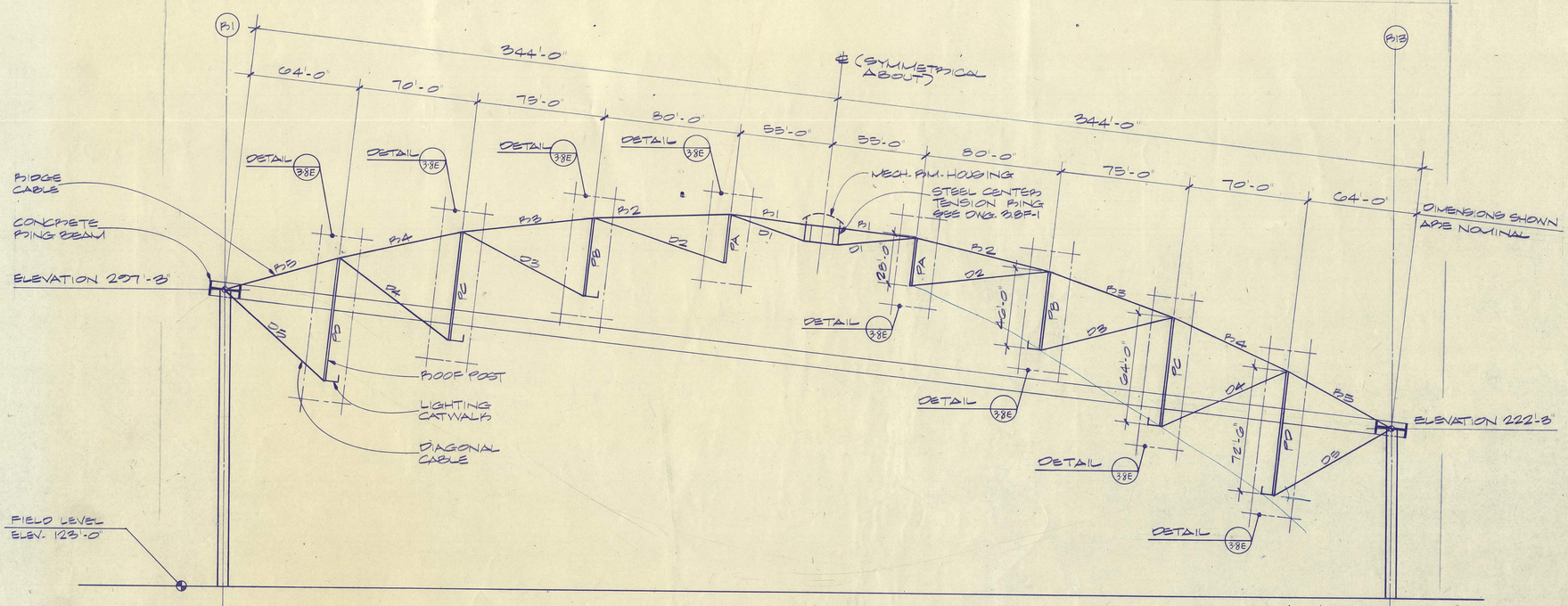

SECTION 2
1/32" = 1'-0"

RECORD SET OCT 30 1989 DATE

NOTES-LEGEND

KKBNA/PC
STRUCTURAL, MECHANICAL, ELECTRICAL, PLUMBING ENGINEERS
575 Madison Avenue
New York, New York 10011 212-242-0900

POST, BUCKLEY, SCHUH & JERNIGAN, INC.
CONSULTING CIVIL ENGINEERS AND PLANNERS
285 First Avenue South
St. Petersburg, Florida 33701 813-446-7276

THE JOINER-ROSE GROUP
TOTAL ACOUSTICS
4125 Centerview Way
Dallas, Texas 75234 214-392-7800

HELLMUTH, OBATA & KASSABAUM, INC.
ARCHITECTURE, INTERIORS, PLANNING, ENGINEERING
323 WEST 8TH STREET
SUITE 700
KANSAS CITY, MISSOURI 64105
816-221-1976

101K SPORT

D C A B
R1
KEY PLAN

THE STADIUM
One Booker Creek Place
St. Petersburg, Pinellas County, Florida

Approval Dates	Owner	Owner Rep	Contractor	Architect Consult
DD	11-21-85	11-21-85	11-21-85	11-21-85
CD	9-10-87	9-10-87	9-10-87	9-10-87
1	9-10-87	9-10-87	9-10-87	9-10-87

Project No. 4008-001

Drawn	Reviewed	Issued
		3-17-87

Revisions		
No.	Description	Date
1	CACO # 10	9-10-87

Category: 3 Sub-Cat.: 1D Sheet: 1

ROOF SECTIONS

LEVEL/QUADRANT OVERLAY DATE TITLE GRID WALL FINISH NOTE OTHER MECHANICAL ELECTRICAL PLUMBING STRUCTURAL ACOUSTICAL

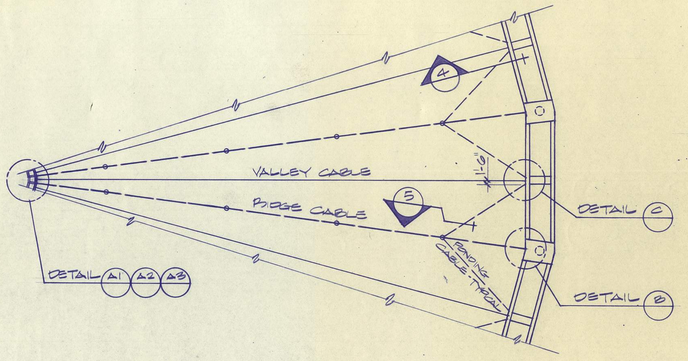

PARTIAL ROOF PLAN
1" = 40'-0"

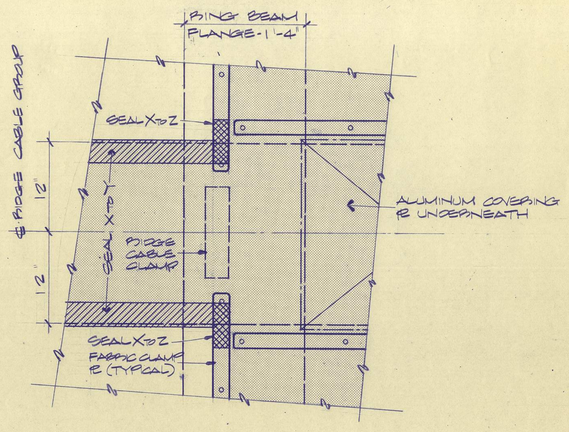

DETAIL (B)
1½" = 1'-0"

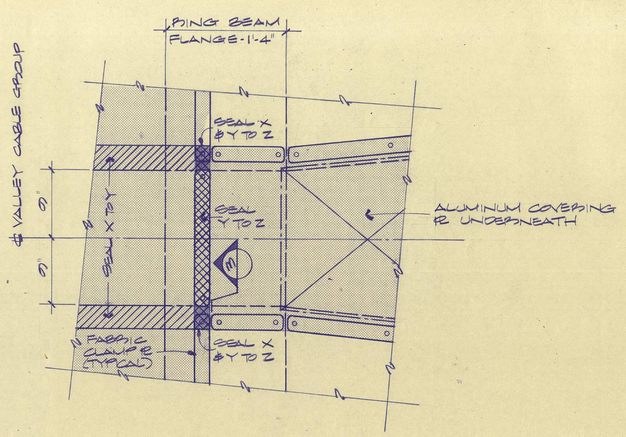

DETAIL (C)
1½" = 1'-0"

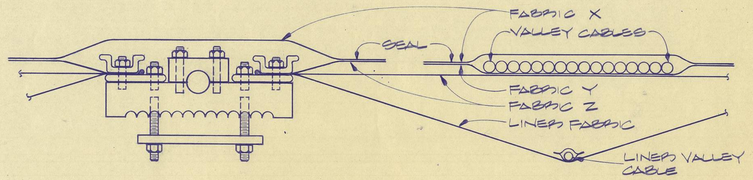

SECTION (1)
3" = 1'-0"

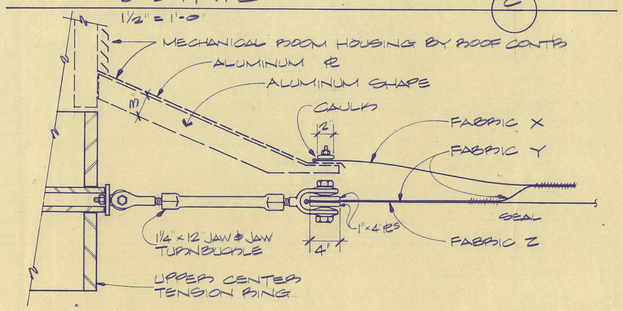

SECTION (2)
1½" = 1'-0"

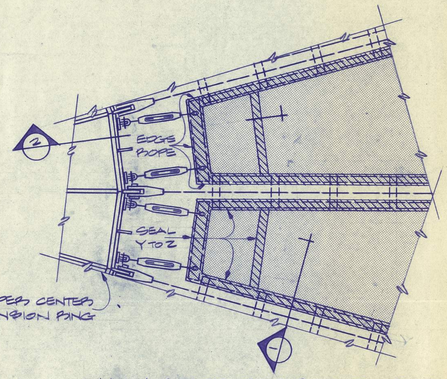

MAIN ROOF-FABRIC-Z-DETAIL (A1)
½" = 1'-0"

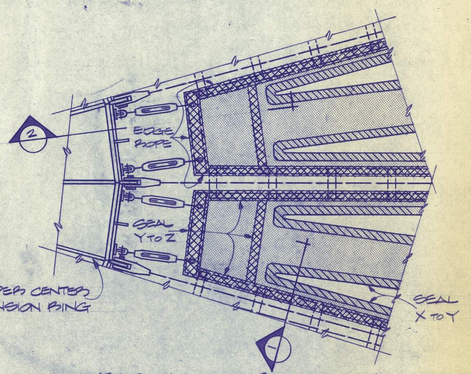

WEARING STRIP-FABRIC-Y-DETAIL (A2)
½" = 1'-0"

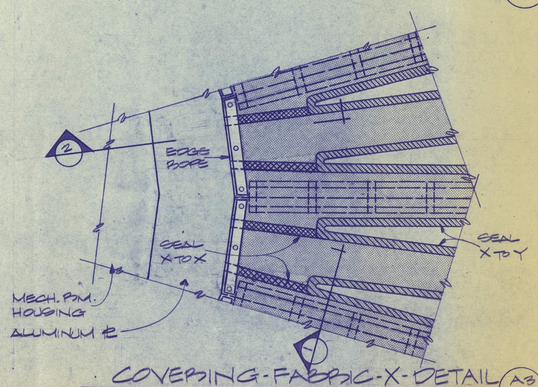

COVERING-FABRIC-X-DETAIL (A3)
½" = 1'-0"

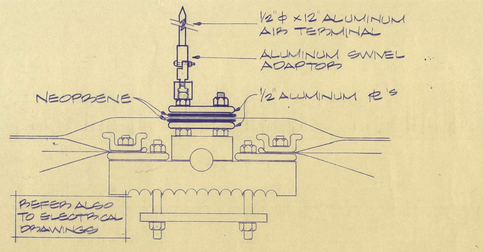

LIGHTNING PROTECTORS DETAIL
3" = 1'-0"

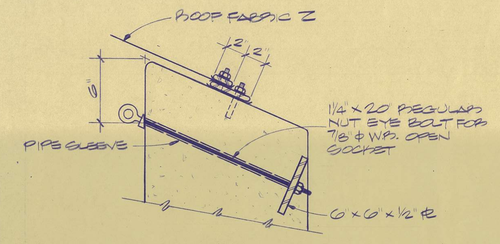

SECTION (4)
2" = 1'-0"

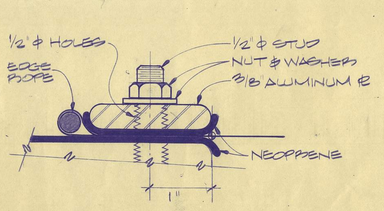

TYPICAL FABRIC CLAMP DETAIL
FULL SIZE

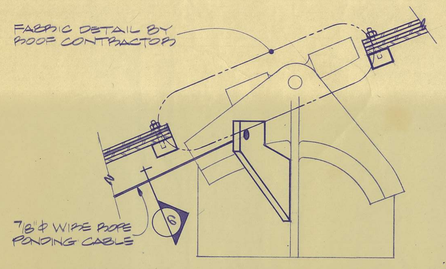

SECTION (5)

SECTION (3)

NOTES-LEGEND

KKBNA/PC
STRUCTURAL, MECHANICAL, ELECTRICAL, PLUMBING ENGINEERS
114 Fifth Avenue
New York, New York 10011
212-242-2900

POST, BUCKLEY, SCHUH & JERNIGAN, INC.
CONSULTING CIVIL ENGINEERS AND PLANNERS
250 Park Avenue, South
Winter Park, Florida 32789
813-446-7275

THE JONES-ROSE GROUP
CONSULTING ACOUSTICS
4125 Cleburton Way
Dallas, Texas 75234
214-392-7800

HELLMUTH, OBATA & KASSABAUM, INC.
ARCHITECTURE, INTERIORS, PLANNING
JAMES S. ELLINGBOE
323 WEST ELEVENTH STREET
SUITE 700
KANSAS CITY, MISSOURI 64105
816-221-1570

101K SPORT

D C A B R1
KEY PLAN

THE STADIUM
One Booker Creek Place
St. Petersburg, Pinellas County, Florida

Approval Dates	Owner	Owner Rep.	Contractor	Architect Consult.
DD	11-21-86	11-21-86	11-21-86	11-21-86
CD	9-10-87	9-10-87	9-10-87	9-10-87
1	9-10-87	9-10-87	9-10-87	9-10-87
2				
3				
4				
5				
6				
7				
8				
9				
10				
11				
12				
13				
14				
15				
16				
17				
18				

Project No. 4008-001

Drawn	Reviewed	Issued
		3.17.87

Revisions

No.	Description	Date
1	CDCO # 10	9-10-87
2		
3		
4		
5		
6		
7		
8		
9		
10		
11		
12		
13		
14		
15		
16		
17		
18		

Category | Sub-Cat. | Sheet

3.1E-1

RECORD SET OCT 30 1989
DATE

CONCEPTUAL FABRIC DETAILS

PLUMBING STRUCTURAL ACOUSTICAL ELECTRICAL MECHANICAL OTHER NOTE FINISH WALL GRID TITLE T LEVEL/QUADRANT OVERLAY DATE

WORKING POINT SCHEDULE	
COL. NO	ELEVATION
R22, R4	286.2667'
R23, R3	292.2662'
R24, R2	295.9784'
R21,	278.5000'

NOTES-LEGEND

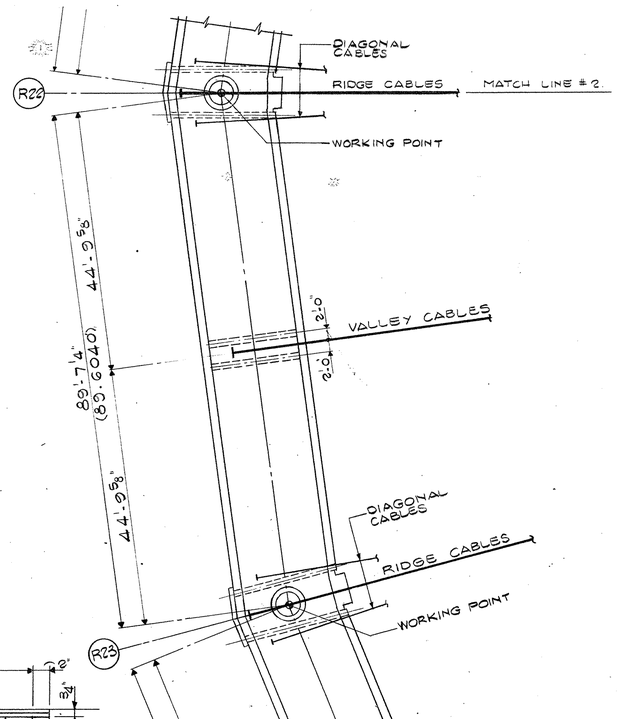

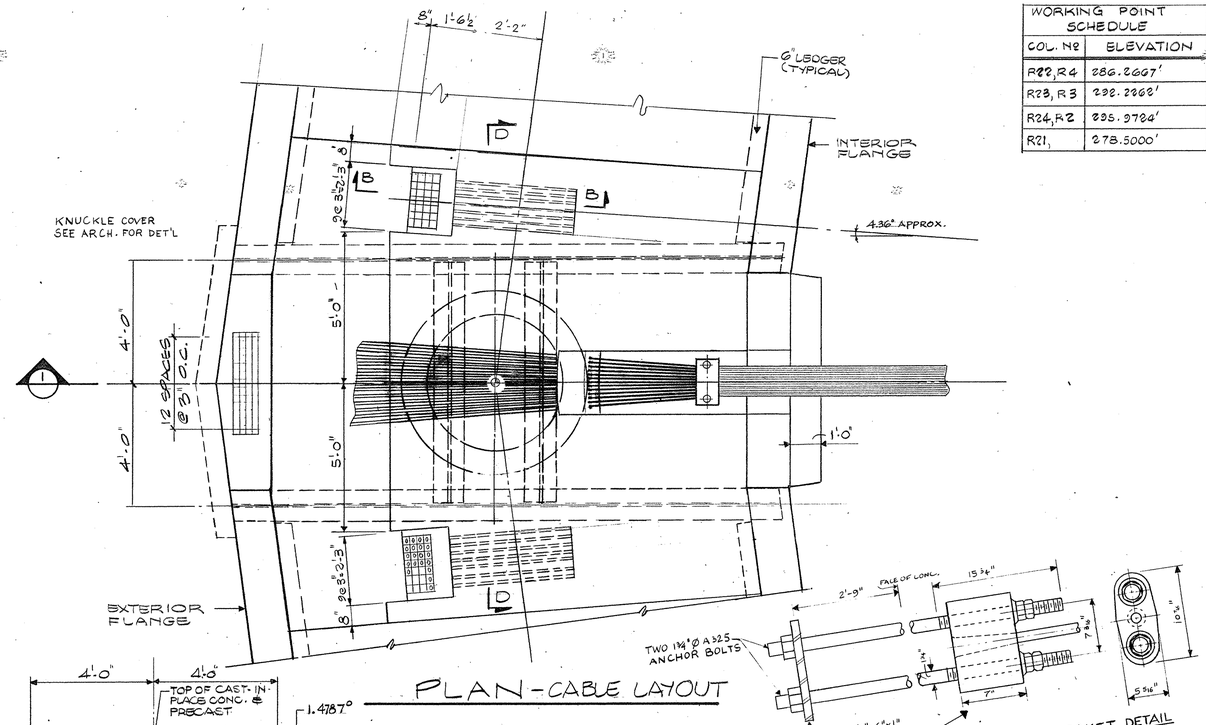

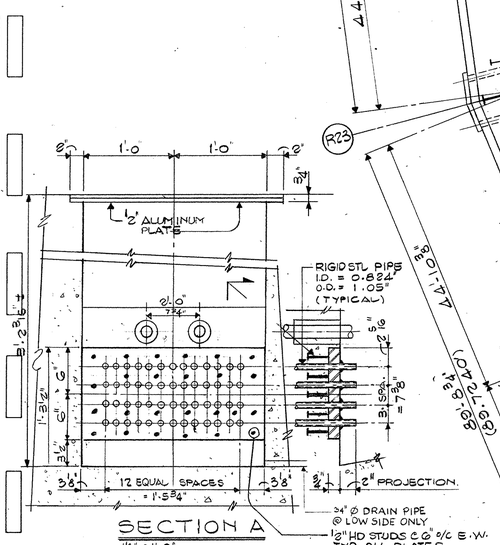

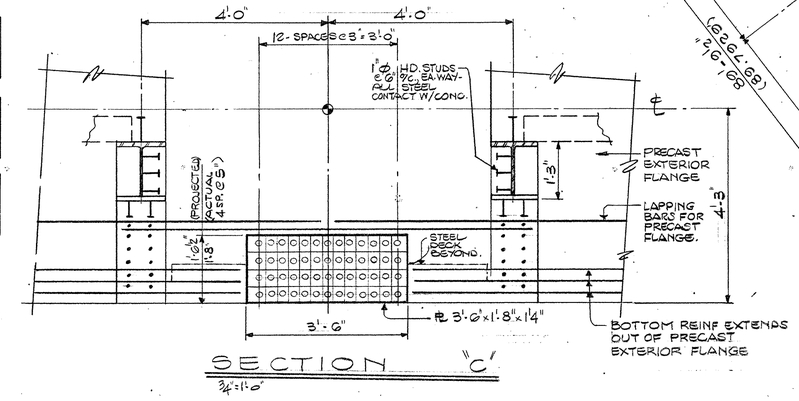

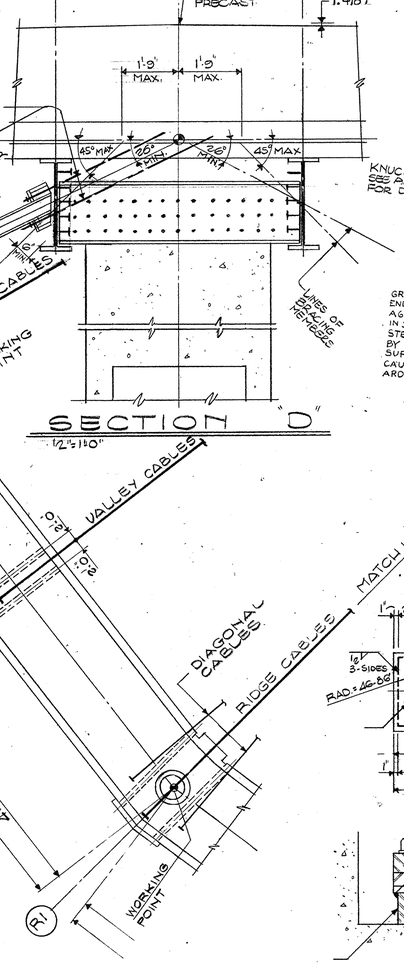

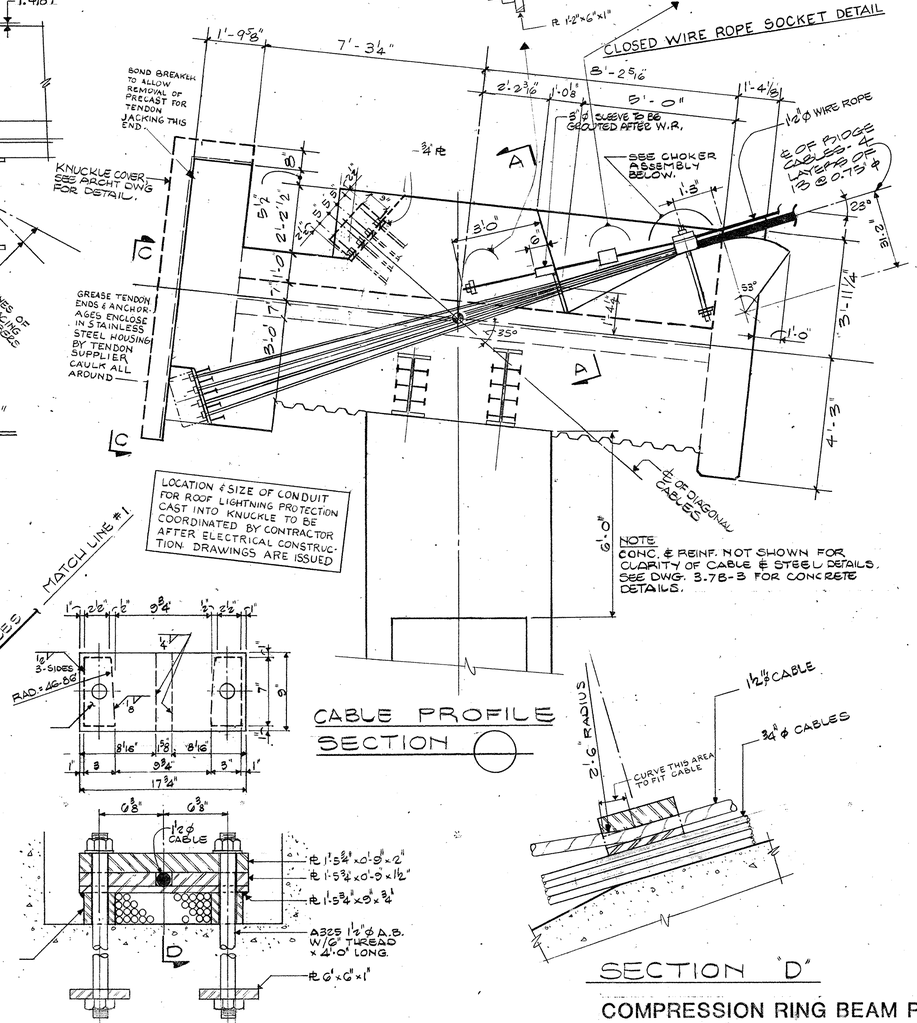

LOCATION & SIZE OF CONDUIT FOR ROOF LIGHTNING PROTECTION CAST INTO KNUCKLE TO BE COORDINATED BY CONTRACTOR AFTER ELECTRICAL CONSTRUCTION. DRAWINGS ARE ISSUED

KKBNA/PC — ENGINEERS
STRUCTURAL, MECHANICAL, ELECTRICAL, PLUMBING
TH Fifth Avenue, New York, New York 10011 — 212-242-0900

POST, BUCKLEY, SCHUH & JERNIGAN, INC.
CIVIL/SITE ENGINEERING, PLANNING, LANDSCAPE ARCHITECTURE AND PLANNERS
St. Petersburg, Florida 33701 — 813-446-7275

HELLMUTH, OBATA & KASSABAUM, INC.
PLANNING, ARCHITECTURE, INTERIORS, PLANNING, GRAPHICS, ENGINEERING
323 WEST EIGHTH STREET, SUITE 501, KANSAS CITY, MISSOURI 64105
816-221-1876

THE JONNER-ROSE GROUP
CONSULTANTS IN ACOUSTICS
4151 Cemetery Way, Dallas, Texas 75244 — 214-392-7800

10K SPORT

CONSTRUCTION PACKAGE 3B- PART 2
PRECAST STADIUM STRUCTURE & ROOF STRUCTURE
SCOPE APPROVAL 3/17/87

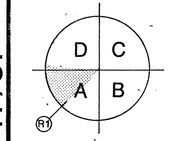

THE STADIUM
One Booker Creek Place
St. Petersburg, Pinellas County, Florida

Approval Dates	Owner	Owner Rep.	Construct. Manager	Architect Consult.
DD	11-21-86	11-21-86	11-21-86	11-21-86
CD				

Project No. 4008-001/9541.01		
Drawn	Reviewed	Issued
Revisions DD 3-26-86		

No.	Description	Date
1		
2		
3		
4		
5		
6		
7		
8		
9		
10		
11		
12		
13		
14		
15		
16		
17		
18		

Category	Sub-Cat.	Sheet
		3.7B -1

COMPRESSION RING BEAM PART PLAN, SECTIONS & DETAILS

STRUCTURAL | ACOUSTICAL | PLUMBING | ELECTRICAL | MECHANICAL | OTHER | NOTE | FINISH | WALL | GRID | TITLE | LEVEL/QUADRANT | OVERLAY DATE

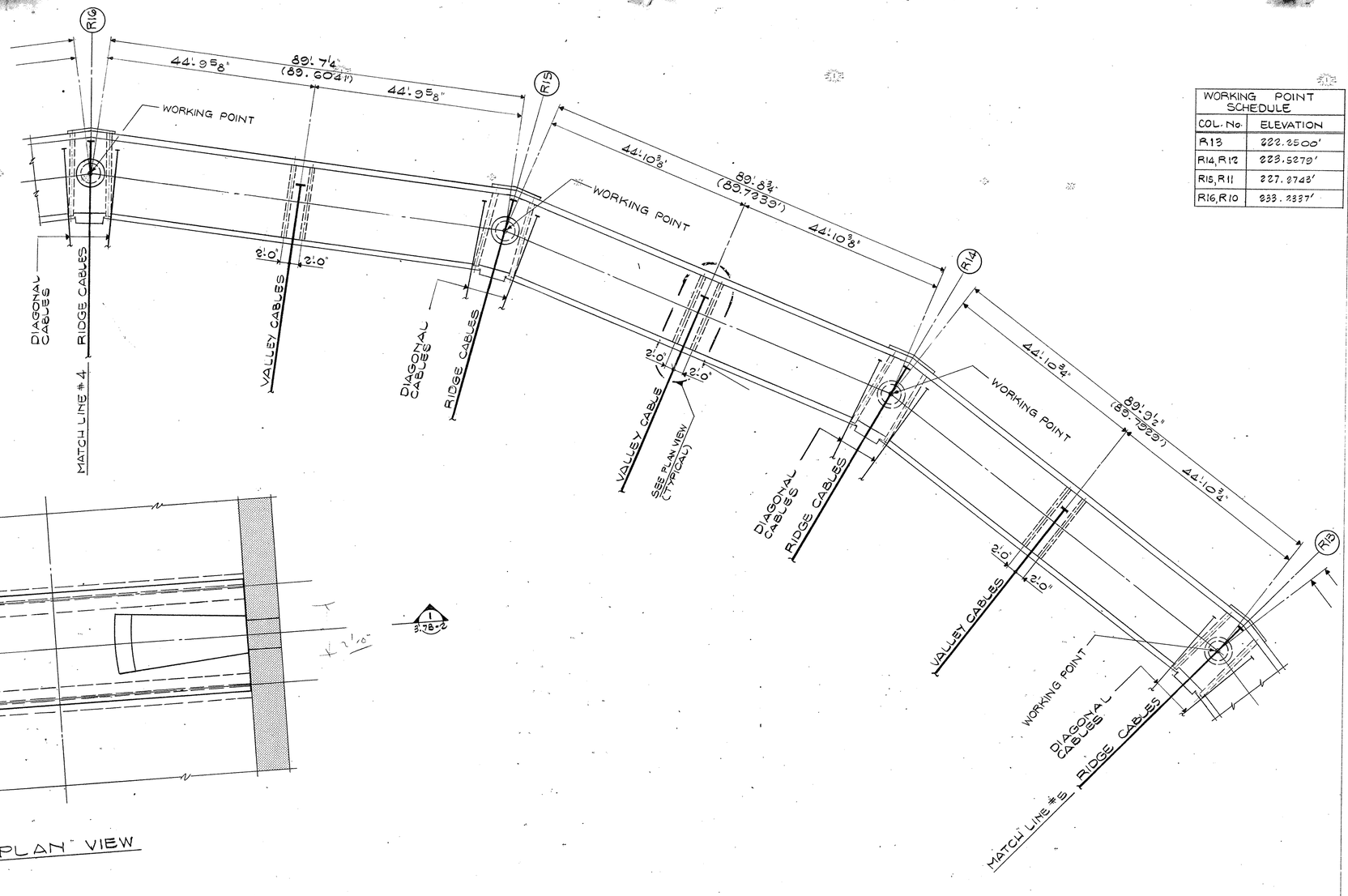

WORKING POINT SCHEDULE	
COL. No.	ELEVATION
R13	222.2500'
R14, R12	223.5279'
R15, R11	227.2743'
R16, R10	233.2337'

PLAN VIEW

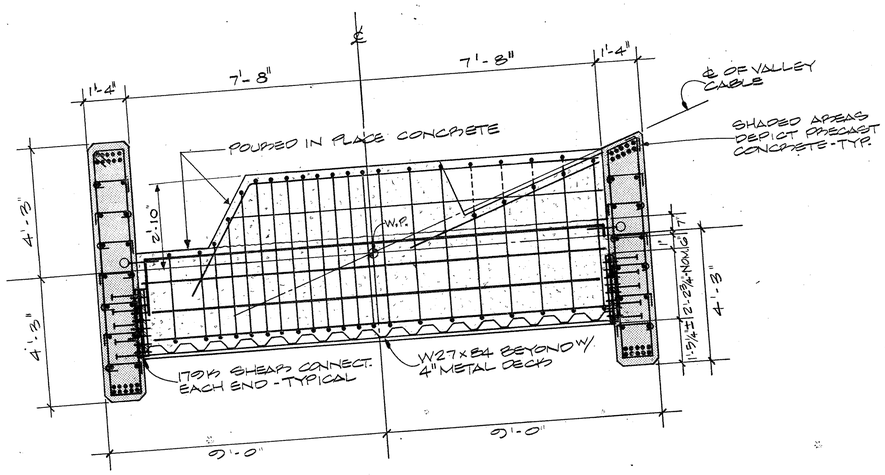

SECTION 1 / 3.7B-2

NOTES-LEGEND

ROOF FRAME GENERAL NOTES

MATERIAL

1. Structural Steel: Bearing plates, Anchor plates shall be ASTM A36, fy = 36 KSI
2. Concrete:
   a. Precast concrete shall be normal weight stone concrete f'c = 5,000 at 28 days.
   b. Cast-in-Place concrete shall be normal weight concrete f'c = 4,000 at 28 days.
3. Reinforcing Steel: ASTM A615, fy = 60 KSI
4. Structural Tubing: Used as sleeve or conduit shall be U.L. listed Schedule 40, galvanized standard rigid steel conduit; ID = 0.824 inch, OD = 1.05 inch.
5. Roof Cable: Roof cables, such as ridge, valley, diagonal, hoop cable are of unbonded 7-wire strands with diameter of 0.6 inch and conformed to ASTM A-416. The corrosion inhibitor shall conform to ASTM D-1743. The polypropylene sheath shall conform to Fed. Spec. L-P-3936.
6. Anchor Bolts: Shall be ASTM A325 Grade.
7. Studs and Deformed Bar Anchors: ASTM A108 and ASTM A496.

WORK

1. Precast ring beam and roof column sections shall be designed by precast contractor based on the "Roof Frame Analysis Member Force Summary" in Appendix A of Specification Section 03410. Design calculations shall be submitted for review and approval by the Engineer before construction.
2. Precast concrete member stresses due to casting, transportation, handling and erection will be the responsibility of precast concrete contractor.
3. Coordination of dimensions and fitness of all wire rope fittings, shackles, eyelets, boss plates, fabric anchoring, stud bolts, steel tubing conduits for the roof cables and anchoring plates shall be coordinated by the contractors.

2-10-87

KKBNA/PC — ENGINEERS
STRUCTURAL, MECHANICAL, ELECTRICAL, PLUMBING
Th Fifth Avenue, New York, New York 10011 212-242-0900

POST, BUCKLEY, SCHUH & JERNIGAN, INC.
CONSULTING CIVIL ENGINEERS AND PLANNERS
400 Madeira Avenue, St. Petersburg, Florida 33701 813-446-7275

HELLMUTH, OBATA & KASSABAUM, INC.
ARCHITECTURE, INTERIORS, PLANNING, GRAPHICS, ENGINEERING
323 WEST EIGHTH STREET, SUITE 500, KANSAS CITY, MISSOURI 64105
816-221-1976

THE JONER-ROSE GROUP
CONSULTANTS IN ACOUSTICS
4125 Centurion Way, Addison, Texas 75234 214-392-7500

sportk

SPORT

CONSTRUCTION PACKAGE 3B- PART 2
PRECAST STADIUM STRUCTURE & ROOF STRUCTURE
SCOPE APPROVAL 3/17/87

KEY PLAN

THE STADIUM
One Booker Creek Place
St. Petersburg, Pinellas County, Florida

Approval Dates	Owner	Owner Rep.	Construct. Manager	Architect Consult.	
DD	11-21-86	11-21-86	11-21-86	11-21-86	
CD					
1					
2					
3					
4					
5					
6					
7					
8					
9					
10					
11					
12					
13					
14					
15					
16					
17					
18					

Project No. 4008-001/9541.01

Drawn	Reviewed	Issued

Revisions DD 3-26-86

No.	Description	Date
1		
2		
3		
4		
5		
6		
7		
8		
9		
10		
11		
12		
13		
14		
15		
16		
17		
18		

Category	Sub-Cat.	Sheet
		3.7B-2

COMPRESSION RING BEAM PART PLAN, SECTIONS & DETAILS

LEVEL/QUADRANT ☐ OVERLAY DATE ☐ TITLE T ☐ GRID ☐ WALL ☐ FINISH ☐ NOTE ☐ OTHER ☐ MECHANICAL ☐ ELECTRICAL ☐ PLUMBING ☐ STRUCTURAL ☐ ACOUSTIGAL ☐

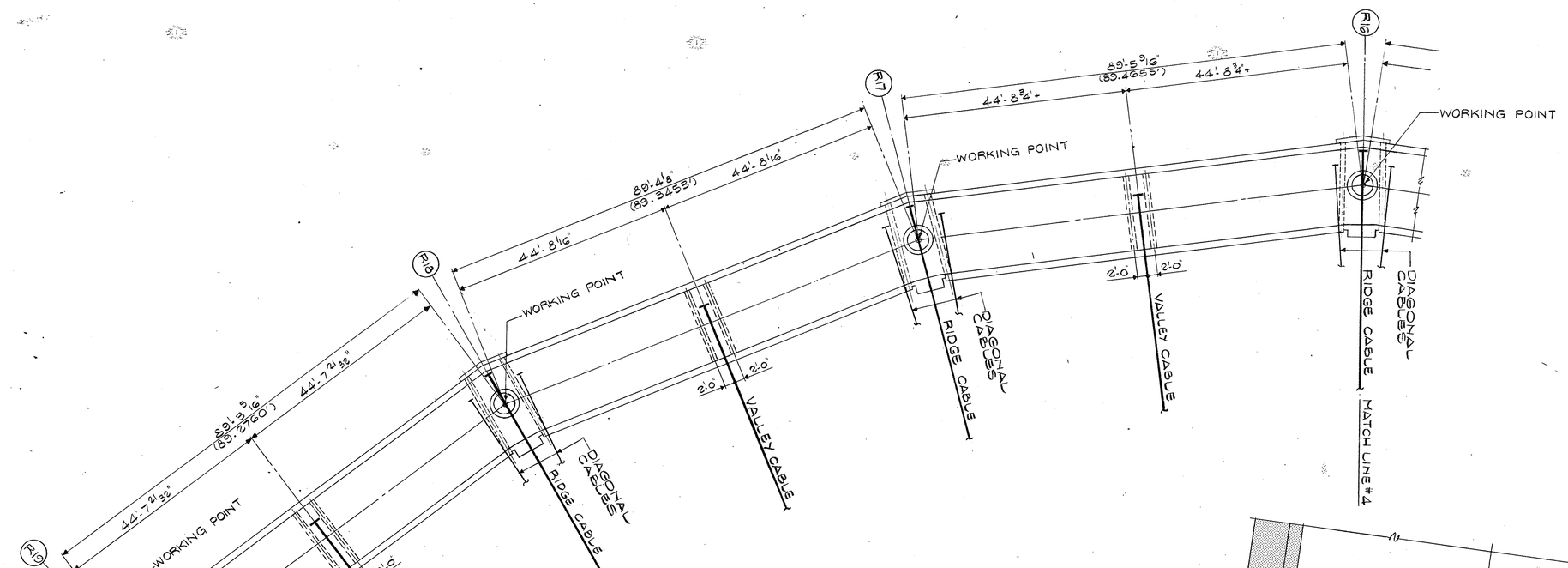

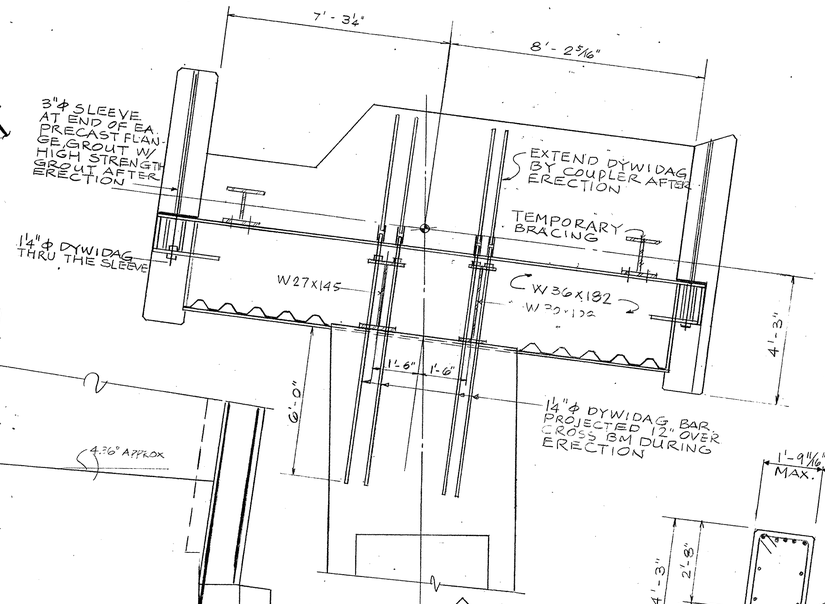

SECTION 1

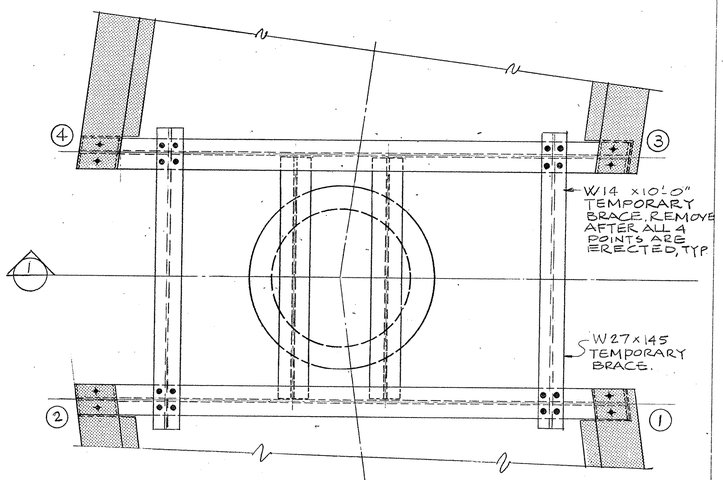

PLAN - KNUCKLE STEEL ASSEMBLY

½" = 1'-0"

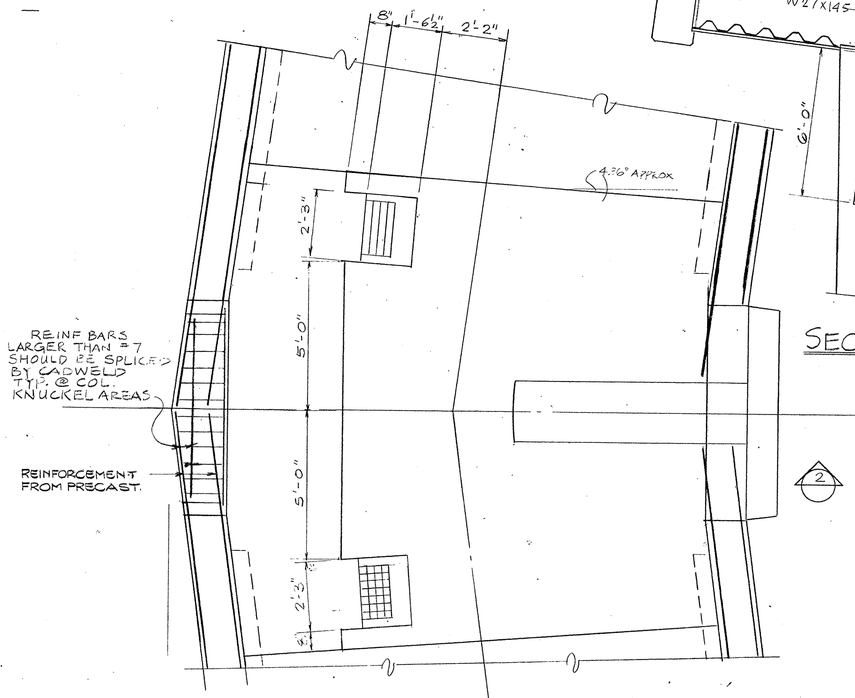

CONCRETE AREA AT KNUCKLE

½" = 1'-0"

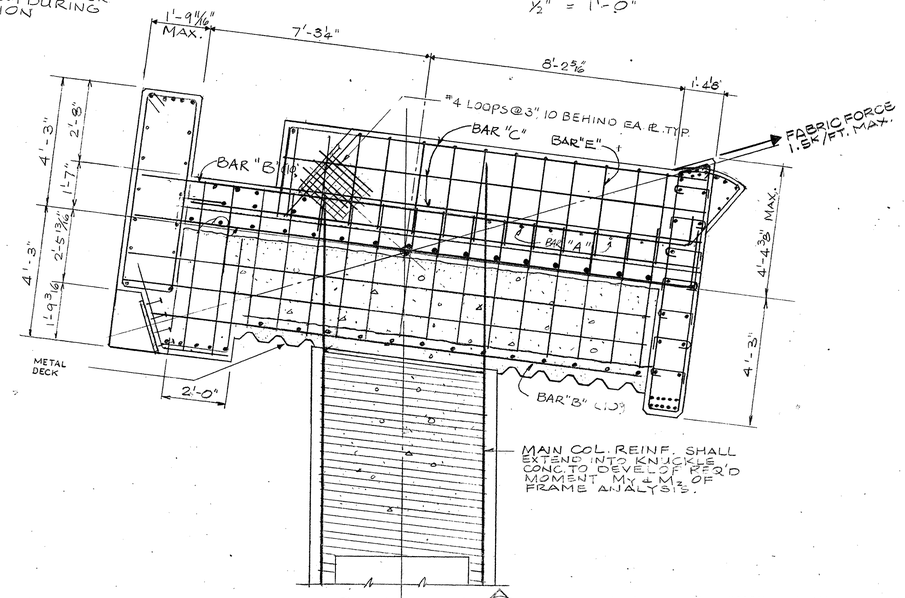

SECTION 2

COMPRESSION RING BEAM PART PLAN, SECTIONS & DETAILS

WORKING POINT SCHEDULE	
COL. No	ELEVATION
R16, R10	233.2337
R17, R9	241.0000
R16, R8	250.0445
R19, R7	259.7500

NOTES-LEGEND

CONSTRUCTION PACKAGE 3B- PART 2
PRECAST STADIUM STRUCTURE & ROOF STRUCTURE
SCOPE APPROVAL 3/17/87

KKBNA/PC
STRUCTURAL, MECHANICAL, ELECTRICAL, PLUMBING ENGINEERS
New York, New York 10011 212-242-0900

POST, BUCKLEY, SCHUH & JERNIGAN, INC.
CONSULTING CIVIL ENGINEERS AND PLANNERS
250 First Avenue, South
St. Petersburg, Florida 33701 813-446-7275

THE JOINER-ROSE GROUP
ACOUSTICS
4123 Cedar Springs
Dallas, Texas 75234 214-522-7800

HELLMUTH, OBATA & KASSABAUM, INC.
ARCHITECTURE, INTERIORS, PLANNING, GRAPHICS AND PRODUCTS
323 WEST EIGHTH STREET
SUITE 700
KANSAS CITY, MISSOURI 64105
816-221-1276

101 INTK SPORT

KEY PLAN

THE STADIUM
One Booker Creek Place
St. Petersburg, Pinellas County, Florida

Approval Dates	Owner	Owner Rep.	Construct. Manager	Architect Consult.
DD	11-21-86	11-21-86	11-21-86	11-21-86
CD				

Project No. 4008-001/9541.01

Drawn	Reviewed	Issued

Revisions DD 3-26-86

No.	Description	Date
1		
2		
3		
4		
5		
6		
7		
8		
9		
10		
11		
12		
13		
14		
15		
16		
17		
18		

Category	Sub-Cat.	Sheet
		3.7B-3

LEVEL/QUADRANT | OVERLAY DATE | TITLE | GRID | WALL | FINISH | NOTE | OTHER | MECHANICAL | ELECTRICAL | PLUMBING | STRUCTURAL | ACOUSTICAL

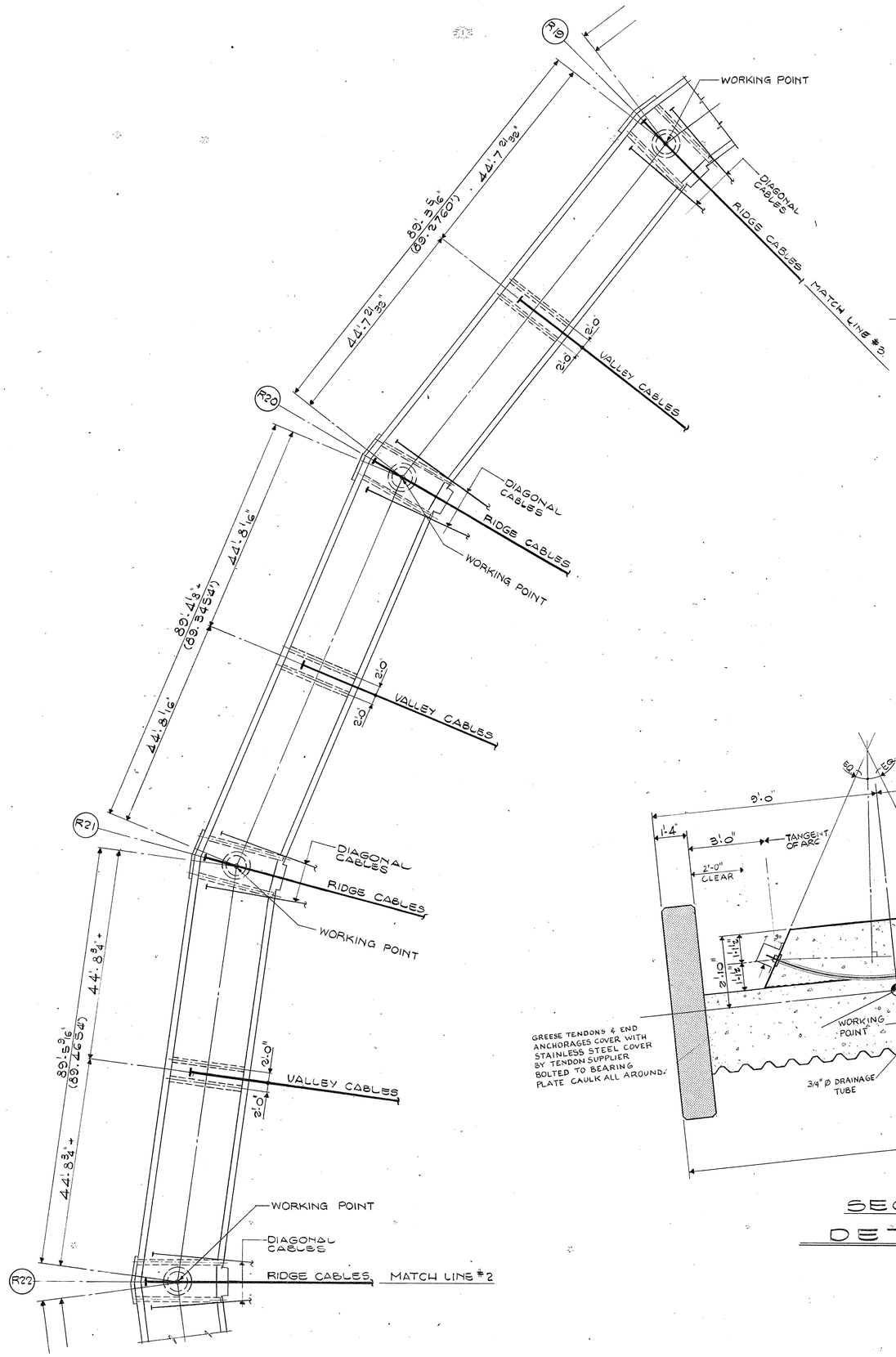

WORKING POINT SCHEDULE	
COL. No.	ELEVATION
R19, R7	259.7500
R20, R6	269.4559
R21, R5	278.5000
R22, R4	286.2667

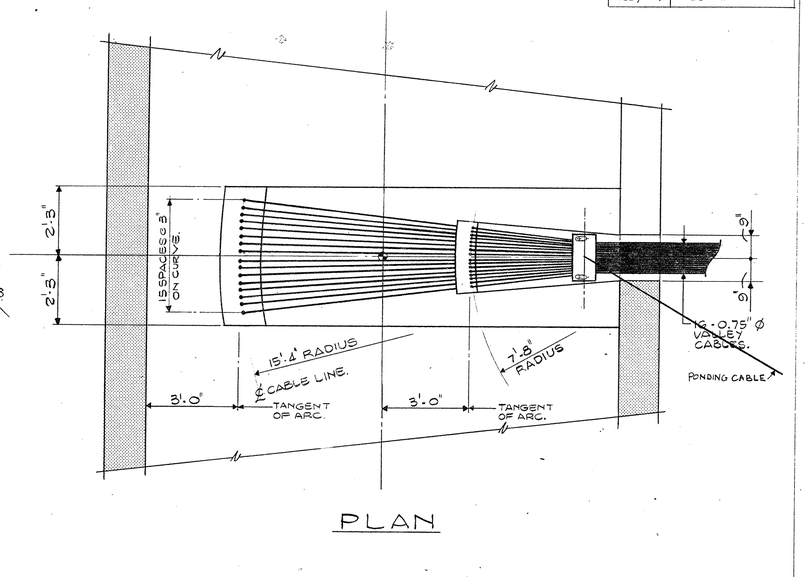

PLAN

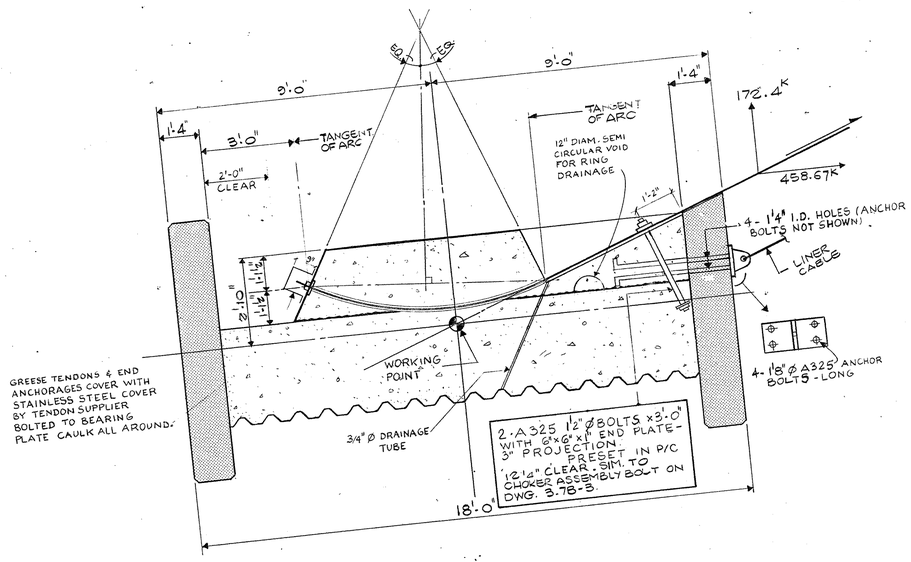

SECTION

DETAIL "B"

NOTES-LEGEND

CONSTRUCTION PACKAGE 3B- PART 2
PRECAST STADIUM STRUCTURE & ROOF STRUCTURE
SCOPE APPROVAL 3/17/87

KKBNA/PC — ENGINEERS
STRUCTURAL, MECHANICAL, ELECTRICAL, PLUMBING
19 Fifth Avenue, New York, New York, 10011 — 212-242-0900

POST, BUCKLEY, SCHUH & JERNIGAN, INC.
CIVIL, STRUCTURAL, ENGINEERS AND PLANNERS
285 First Avenue South, St. Petersburg, Florida 33701 — 813-446-7275

THE JOINER-ROSE GROUP
CONSULTANTS IN ACOUSTICS
4245 Kemp Blvd., Suite 224, Wichita Falls, Texas 76308 — 214-692-7600

HELLMUTH, OBATA & KASSABAUM, INC.
ARCHITECTURE, INTERIORS, PLANNING, GRAPHICS, ENGINEERING
2345 GRAND EIGHTH STREET, SUITE 700, KANSAS CITY, MISSOURI 64105
816-221-1919

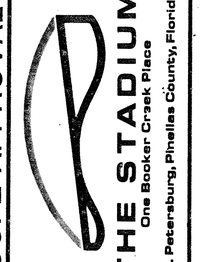

KEY PLAN

THE STADIUM
One Booker Creek Place
St. Petersburg, Pinellas County, Florida

Approval Dates	Owner	Owner Rep.	Construct. Manager	Architect Consult.	
DD	11-21-86	11-21-86	11-21-86	11-21-86	
CD					
1					
2					
3					
4					
5					
6					
7					
8					
9					
10					
11					
12					
13					
14					
15					
16					
17					
18					

Project No. 4008-001/9541.01

Drawn	Reviewed	Issued

Revisions DD 3-26-86

No.	Description	Date
1		
2		
3		
4		
5		
6		
7		
8		
9		
10		
11		
12		
13		
14		
15		
16		
17		
18		

Category: — Sub-Cat.: — Sheet: 3.7B-4

COMPRESSION RING BEAM PART PLAN, SECTIONS & DETAILS

LEVEL/QUADRANT — OVERLAY DATE
TITLE T — GRID — WALL — FINISH — NOTE — OTHER — MECHANICAL — ELECTRICAL — PLUMBING — STRUCTURAL — ACOUSTICAL

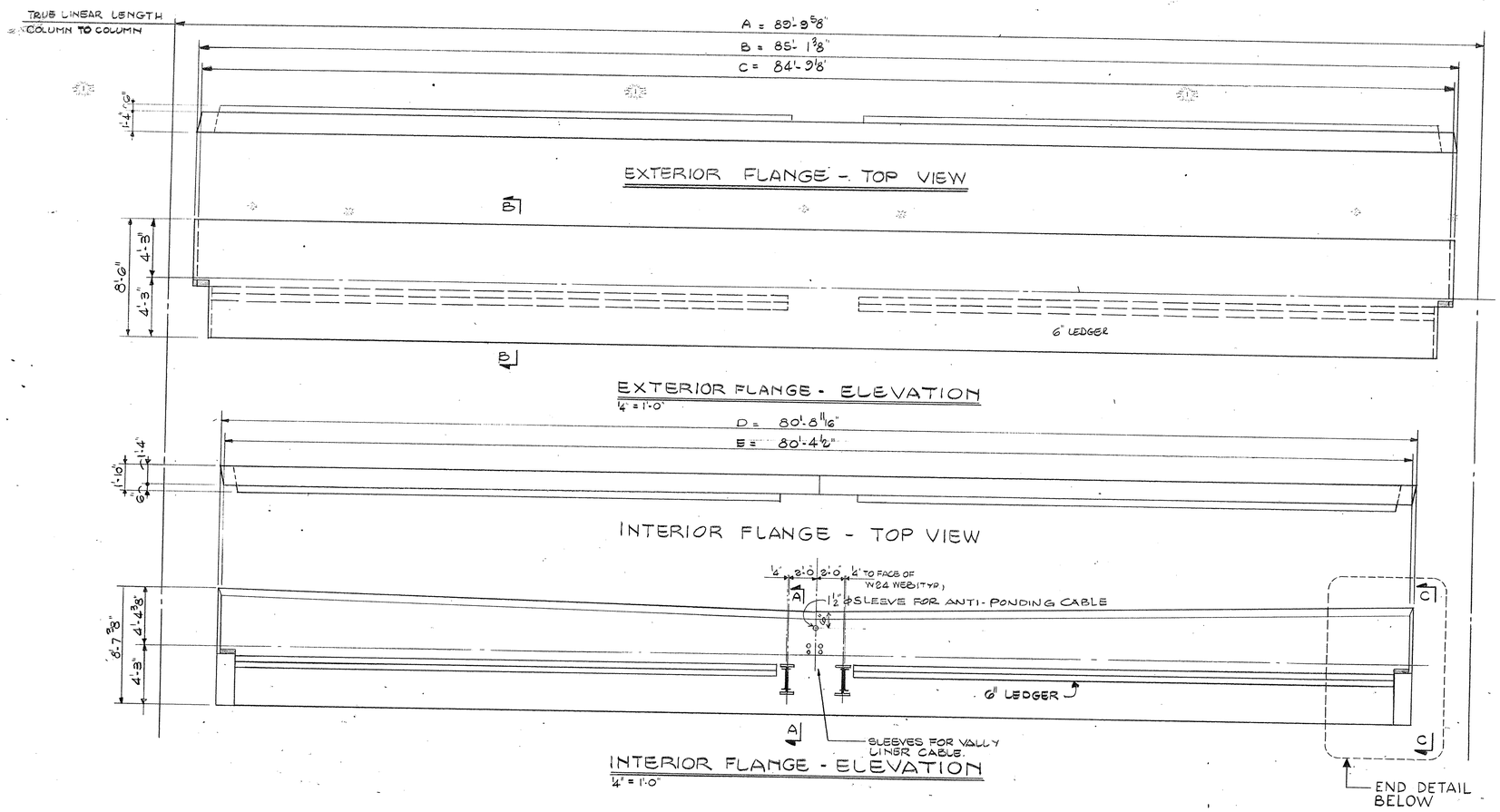

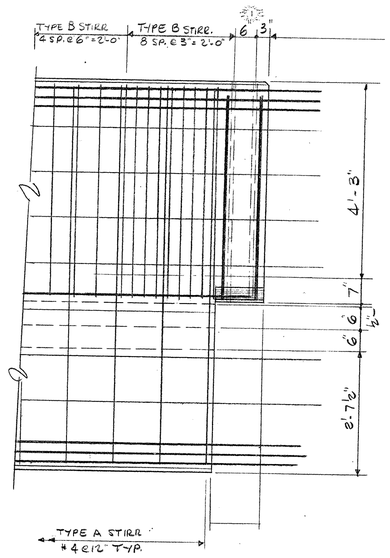

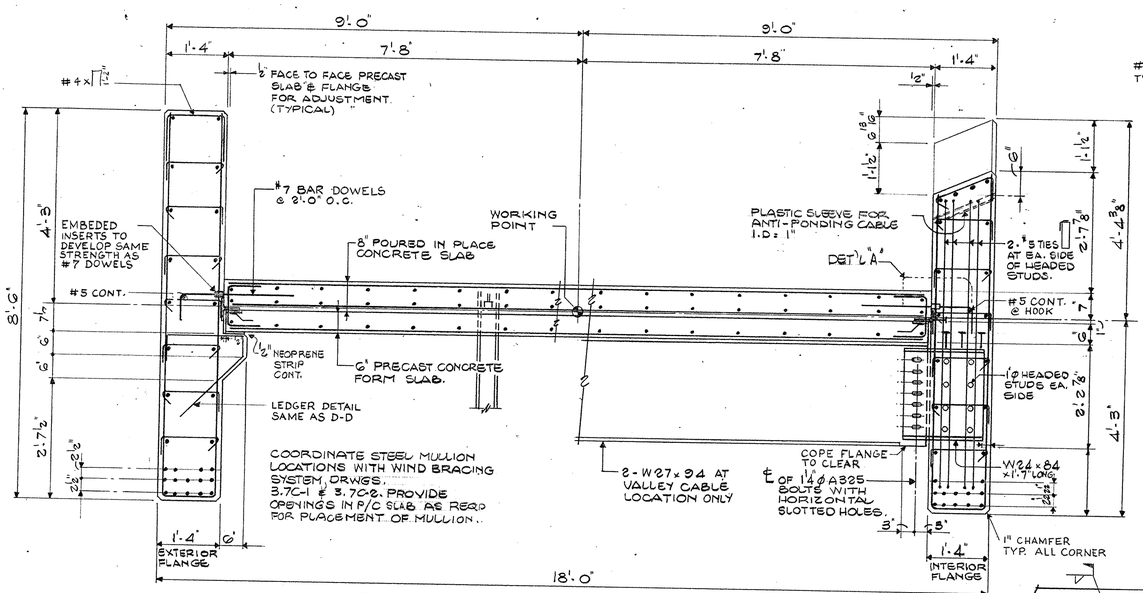

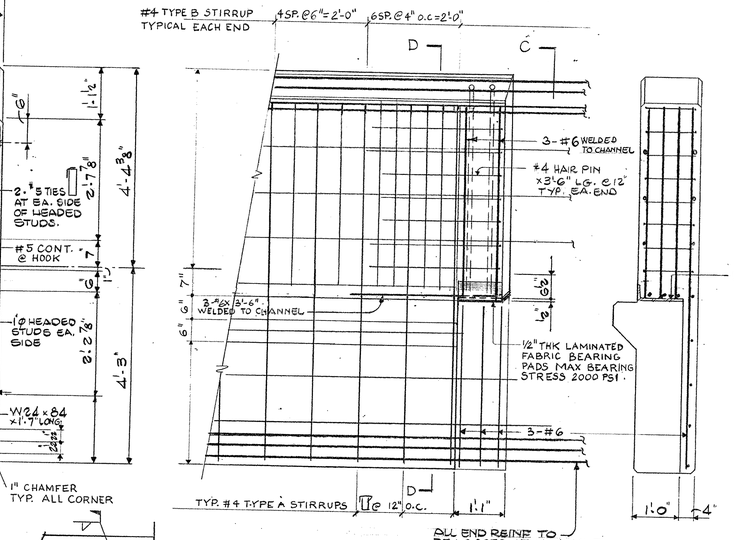

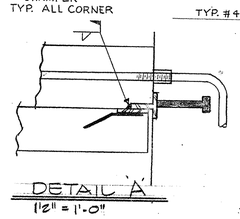

TYPICAL PRECAST CONC. RING BEAM SECTION

NOTE: CONTRACTOR COORDINATE ROOF DRAIN OPENING LOCATIONS AND SIZES WITH PLUMBING DRAWINGS & MECHANICAL SUB-CONTRACTOR AFTER THE PLUMBING DRAWINGS ARE ISSUED FOR CONSTRUCTION.

NOTES-LEGEND

CONSTRUCTION PACKAGE 3B- PART 2
PRECAST STADIUM STRUCTURE & ROOF STRUCTURE
SCOPE APPROVAL 3/17/87

KKBNA/PC — STRUCTURAL, MECHANICAL, ELECTRICAL, PLUMBING ENGINEERS
99 Fifth Avenue, New York, New York 10011 — 212-243-0900

POST, BUCKLEY, SCHUH & JERNIGAN, INC. — CIVIL ENGINEERS AND PLANNERS
250 Third Avenue North, Suite 400, St. Petersburg, Florida 33701 — 813-446-7275

THE JOINER-ROSE GROUP — CONSULTANTS IN ACOUSTICS
1825 Centurion Way, Dallas, Texas 75234 — 214-392-7800

HELLMUTH, OBATA & KASSABAUM, INC. — ARCHITECTURE, INTERIORS, PLANNING, GRAPHICS, ENGINEERING
323 West Eighth Street, Suite 700, Kansas City, Missouri 64105 — 816-421-1074

HOK SPORT

KEY PLAN

THE STADIUM
One Booker Creek Place
St. Petersburg, Pinellas County, Florida

Approval Dates	Owner	Owner Rep.	Construct. Manager	Architect Consult.
DD	11-21-86	11-21-86	11-21-86	11-21-86
CD				

Project No. 4008-001/9541.01		
Drawn	Reviewed	Issued

Revisions DD 3-26-86		
No.	Description	Date
1		
2		
3		
4		
5		
6		
7		
8		
9		
10		
11		
12		
13		
14		
15		
16		
17		
18		

Category	Sub-Cat.	Sheet
		3.7B-5

COMPRESSION RING BEAM ELEVATIONS & SECTIONS

ACOUSTICAL | STRUCTURAL | PLUMBING | ELECTRICAL | MECHANICAL | OTHER | NOTE | FINISH | WALL | GRID | TITLE | LEVEL/QUADRANT | OVERLAY DATE

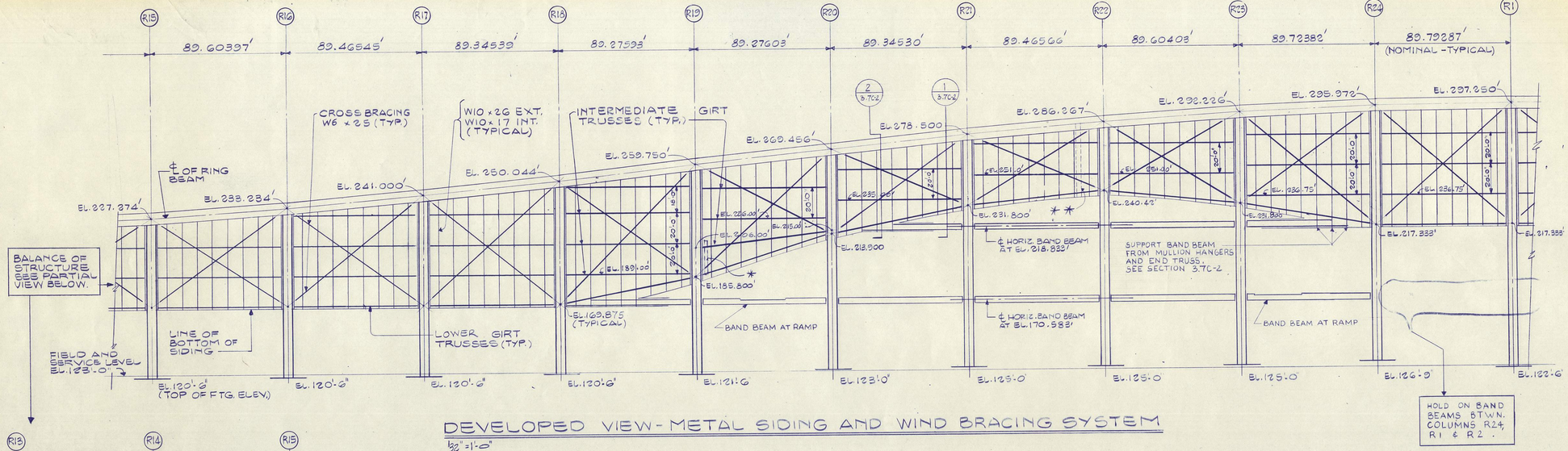

DEVELOPED VIEW - METAL SIDING AND WIND BRACING SYSTEM

1/32" = 1'-0"

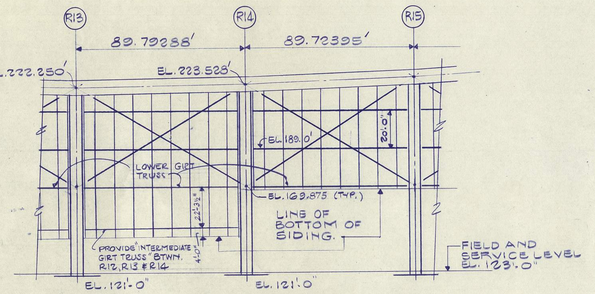

PARTIAL DEVELOPED VIEW

1/32" = 1'-0"

DIMENSIONS GIVEN BETWEEN COLUMN GRIDS ARE THE STRAIGHT-LINE DISTANCES BETWEEN COLUMN CENTER LINES.

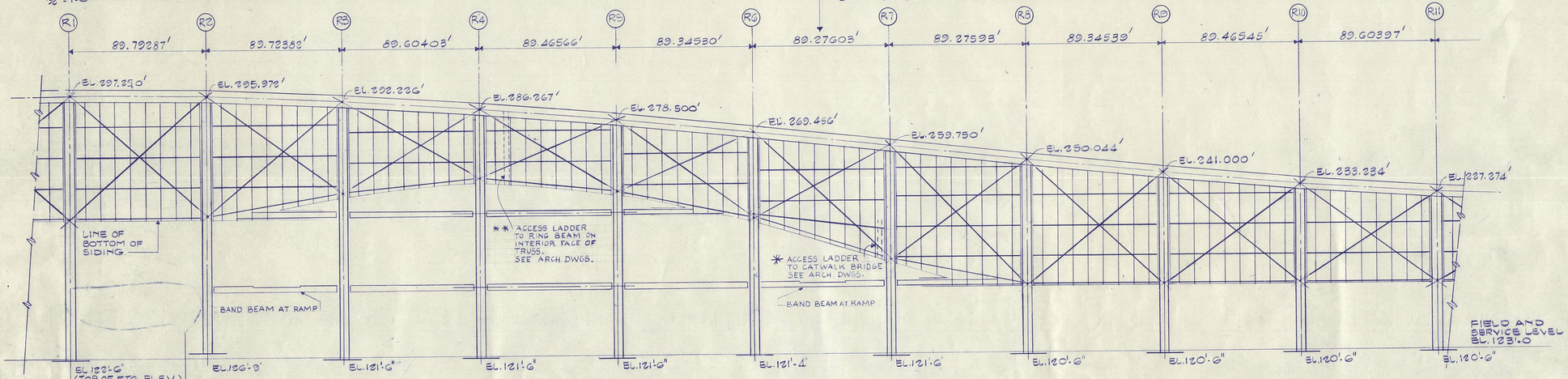

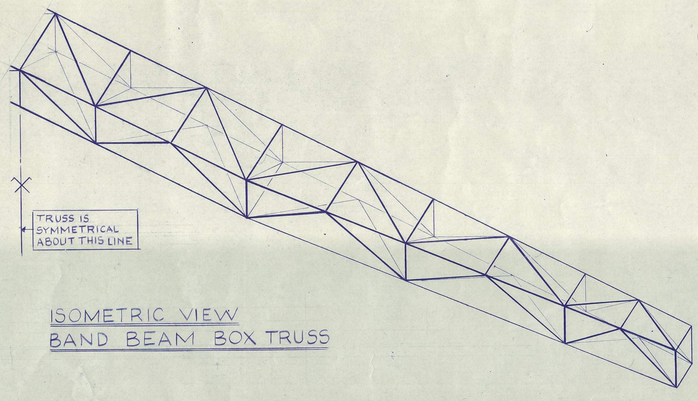

ISOMETRIC VIEW
BAND BEAM BOX TRUSS

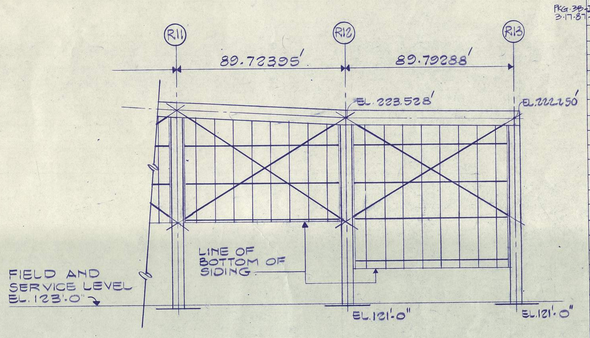

WIND BRACING SYSTEM - ELEVATION

NOTES-LEGEND

KKBNA/PC
STRUCTURAL, MECHANICAL, ELECTRICAL, PLUMBING ENGINEERS
14 Fifth Avenue
New York, New York 10011
212-242-9900

POST, BUCKLEY, SCHUH & JERNIGAN, INC.
CIVIL ENGINEERS, ENGINEERS AND PLANNERS
240 First Avenue South
St. Petersburg, Florida 33701
813-446-7275

THE JOINER-ROSE GROUP
ACOUSTICS
4527 Dorset Drive
Dallas, Texas 75234
214-392-7800

HELMUTH, OBATA & KASSABAUM, INC.
ARCHITECTS, PLANNERS, INTERIORS, GRAPHICS, ENGINEERING
323 WEST EIGHTH STREET
SUITE 200
KANSAS CITY, MISSOURI 64105
816-221-1576

101 SPORT

D C
A B
R1
KEY PLAN

THE STADIUM
One Booker Creek Place
St. Petersburg, Pinellas County, Florida

Approval Dates

	Owner	Owner Rep.	Contractor	Architect Consult
DD	9.10.87	9.10.87	9.10.87	9.10.87
CD	9.10.87	9.10.87	9.10.87	9.10.87

Pkg 3B 3.7-5

Project No. 4008-001

Drawn	Reviewed	Issued
		3-17-87

Revisions

No.	Description	Date
1	ASCO # 16	9.10.87

Category: Sub-Cat.: Sheet: 3.7C-1

STRUCTURAL ACOUSTICAL PLUMBING ELECTRICAL MECHANICAL OTHER NOTE FINISH WALL GRID TITLE LEVEL/QUADRANT OVERLAY DATE

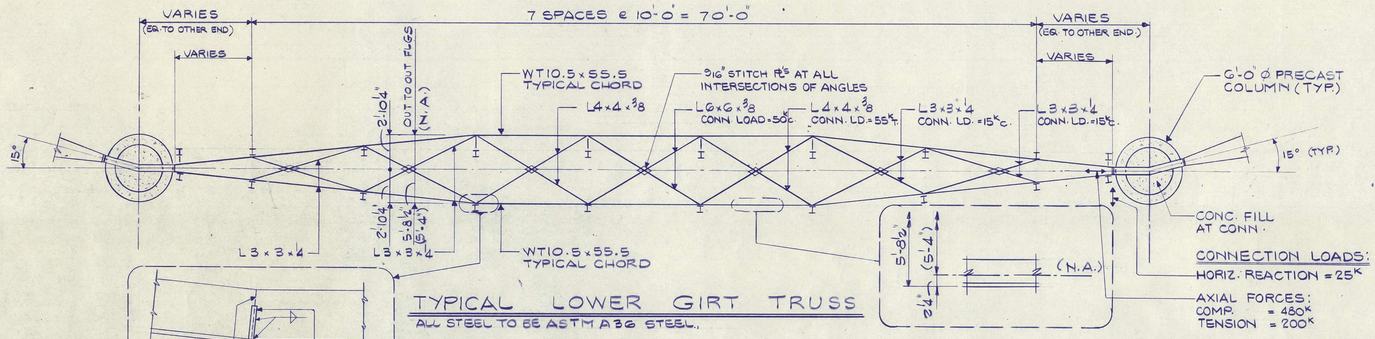

TYPICAL LOWER GIRT TRUSS

ALL STEEL TO BE ASTM A36 STEEL.

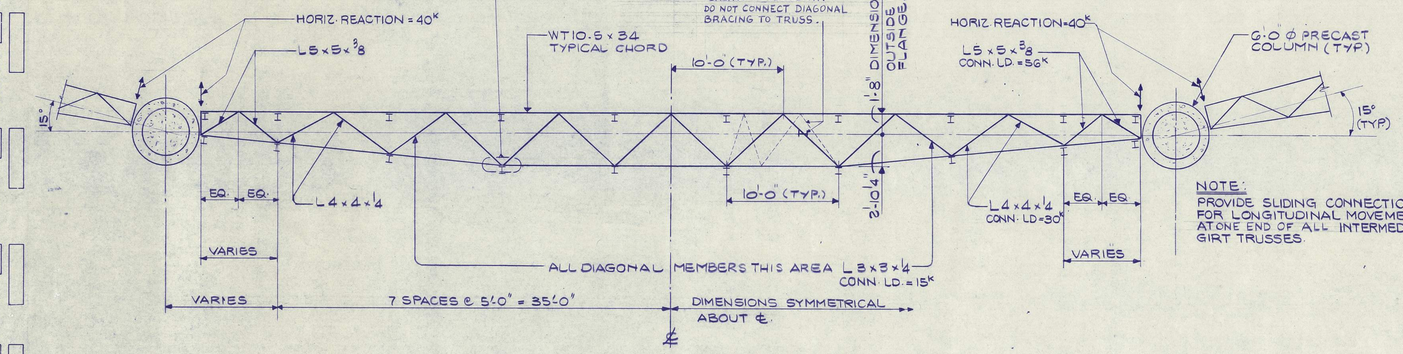

TYPICAL INTERMEDIATE GIRT TRUSS

ALL STEEL TO BE ASTM A36 STEEL.

NOTE:
PROVIDE SLIDING CONNECTIONS FOR LONGITUDINAL MOVEMENT AT ONE END OF ALL INTERMEDIATE GIRT TRUSSES.

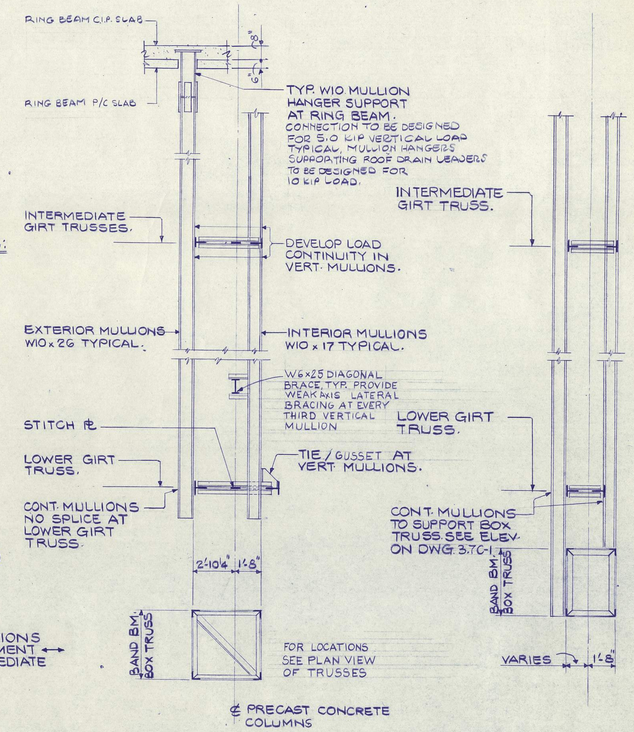

1 SECTION

2 SECTION 2

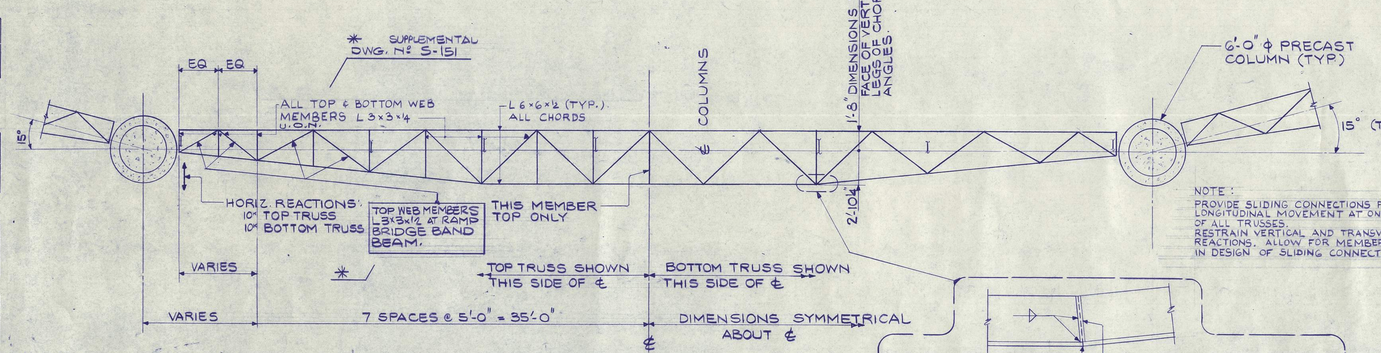

TOP & BOTTOM — PLAN VIEW

NOTE:
PROVIDE SLIDING CONNECTIONS FOR LONGITUDINAL MOVEMENT AT ONE END OF ALL TRUSSES. RESTRAIN VERTICAL AND TRANSVERSE REACTIONS. ALLOW FOR MEMBER ROTATION IN DESIGN OF SLIDING CONNECTION.

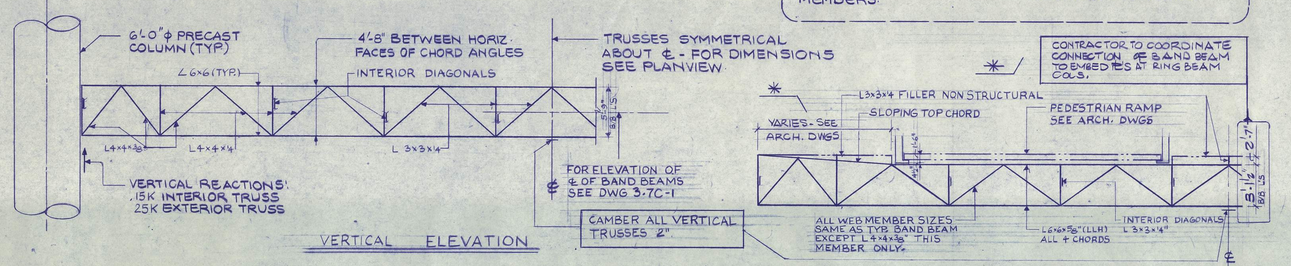

VERTICAL ELEVATION

BAND BEAM @ RAMPS - FRONT VIEW

TYPICAL HORIZONTAL BAND BEAM BOX TRUSSES

ALL STEEL TO BE ASTM A36 STEEL

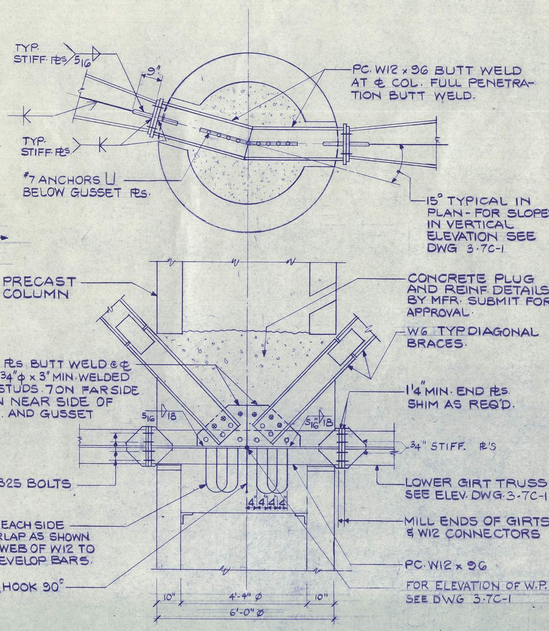

DETAIL AT CONNECTIONS OF LOWER GIRT TRUSSES AND 12E BRACES AT PRECAST COLUMNS.

NOTES-LEGEND

KKBNA/PC
STRUCTURAL, MECHANICAL, ELECTRICAL, PLUMBING
114 Fifth Avenue
New York, New York 10011
212-242-0900

POST, BUCKLEY, SCHUH & JERNIGAN, INC.
CIVIL, STRUCTURAL, ENVIRONMENTAL ENGINEERS AND PLANNERS
260 First Avenue South
St. Petersburg, Florida 33701
813-446-7275

THE JOHNER-ROSE GROUP
CONSULTANTS IN ACOUSTICS
4611 Lemmon Avenue
Dallas, Texas 75234
214-382-7800

HELLMUTH, OBATA & KASSABAUM, INC.
ARCHITECTURE, INTERIORS, PLANNING, GRAPHICS, ENGINEERING
323 WEST EIGHTH STREET
SUITE 600
KANSAS CITY, MISSOURI 64105
816-221-1076

101K SPORT

D C A B R1

KEY PLAN

THE STADIUM
One Booker Creek Place
St. Petersburg, Pinellas County, Florida

Approval Dates	Owner	Owner Rep.	Contractor	Architect Consult.
DD				
CD	9-10-87	9-10-87	9-10-87	9-10-87
1	9-10-87	9-10-87	9-10-87	9-10-87

Project No. 4008-001

Drawn	Reviewed	Issued
		3-17-87

Revisions

No.	Description	Date
1	ASCO # 10	9-10-87

Category	Sub-Cat.	Sheet
		3.7C-2

WIND BRACING SYSTEM - SECTIONS & DETAILS

STRUCTURAL ACOUSTICAL PLUMBING ELECTRICAL MECHANICAL OTHER NOTE FINISH WALL GRID TITLE T OVERLAY DATE LEVEL/QUADRANT

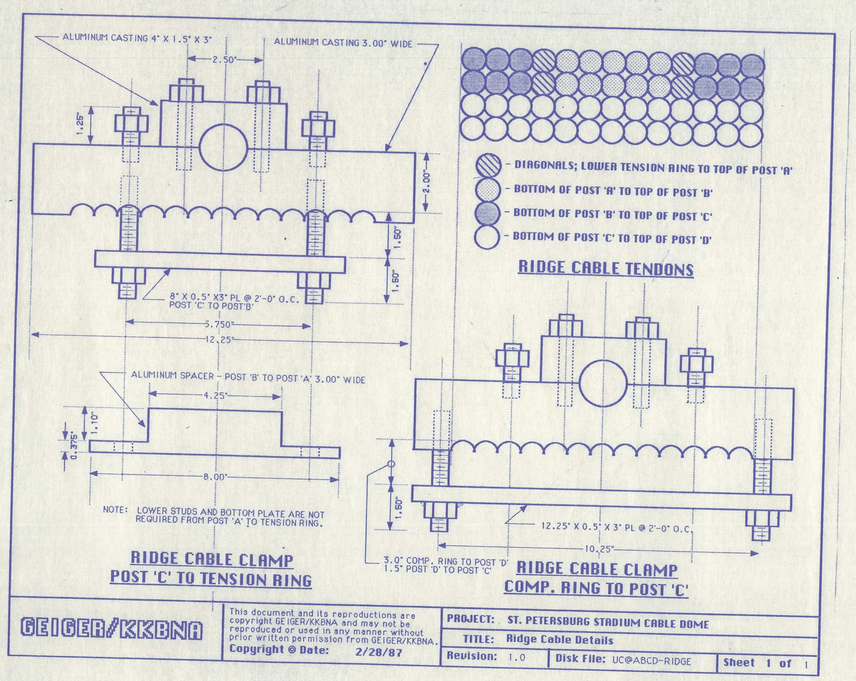

GEIGER/KKBNA

This document and its reproductions are copyright GEIGER/KKBNA and may not be reproduced or used in any manner without prior written permission from GEIGER/KKBNA.
Copyright © Date: 2/28/87

PROJECT: ST. PETERSBURG STADIUM CABLE DOME
TITLE: Ridge Cable Details
Revision: 1.0 | Disk File: UC@ABCD-RIDGE | Sheet 1 of 1

ACOUSTICAL
STRUCTURAL
PLUMBING
ELECTRICAL
MECHANICAL
OTHER
NOTE
FINISH
WALL
GRID
TITLE T
OVERLAY DATE
LEVEL/QUADRANT

NOTES-LEGEND

KKBNA/PC ENGINEERS
STRUCTURAL, MECHANICAL, ELECTRICAL, PLUMBING
711 Fifth Avenue
New York, New York 10017 212-242-0900

POST, BUCKLEY, SCHUH & JERNIGAN, INC.
CONSULTING CIVIL ENGINEERS AND PLANNERS
286 Pine Avenue South
St. Petersburg, Florida 33701 813-446-7276

THE JONER-ROSE GROUP
CONSULTANTS IN ACOUSTICS
4121 Centerville Way
Dallas, Texas 75234 214-392-7800

HELLMUTH, OBATA & KASSABAUM, INC.
ARCHITECTURE, INTERIORS, PLANNING,
GRAPHIC DESIGN
323 WEST EIGHTH STREET
SUITE 501
KANSAS CITY, MISSOURI 64105
816-221-1876

SPORT

D C
A B
R1
KEY PLAN

THE STADIUM
One Booker Creek Place
St. Petersburg, Pinellas County, Florida

Approval Dates	Owner	Owner Rep	Construct. Manager	Architect Consult
DD	11-21-86	11-21-86	11-21-86	11-21-86
CD	3-17-87	3-17-87	3-17-87	3-17-87

Project No. 4008-001/9541.01

Drawn	Reviewed	Issued
		3-17-87

Revisions

No.	Description	Date
1		
2		
3		
4		
5		
6		
7		
8		
9		
10		
11		
12		
13		
14		
15		
16		
17		
18		

Category Sub-Cat. Sheet
3.8C-1

RECORD SET
OCT 30 1989
DATE

RIDGE CABLE FABRIC CLAMP DETAILS

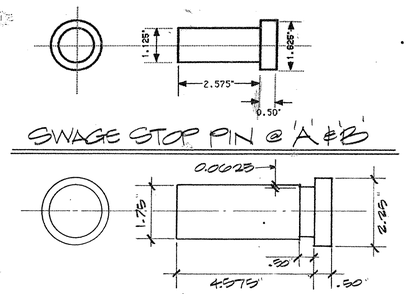

SWAGE STOP PIN @ 'A' & 'B'

SWAGE STOP PIN @ 'C' & 'D'

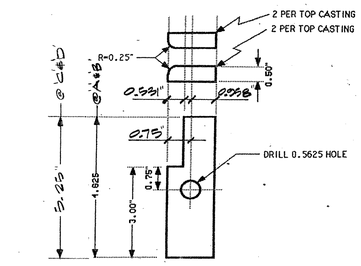

PIN CLAMPS

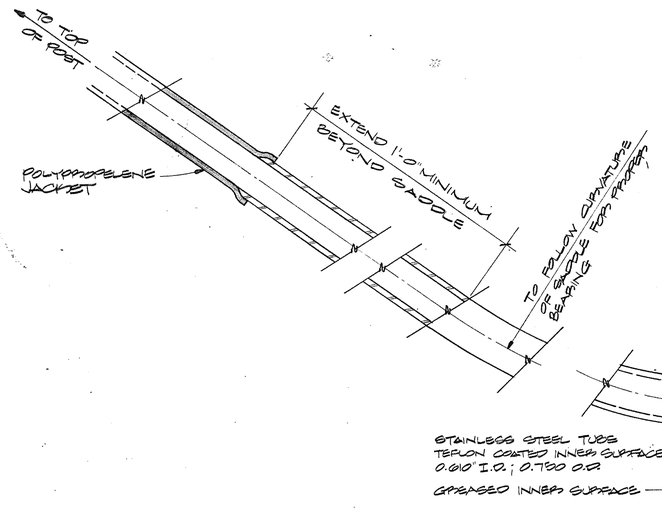

STEEL JACKET DETAIL FOR STRANDS AT LOWER CASTING OF POST 'D'

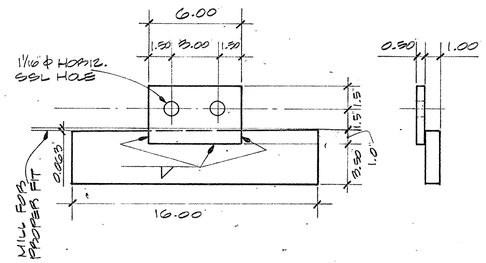

CLOSURE PL AT LOWER CASTINGS - ALL POSTS

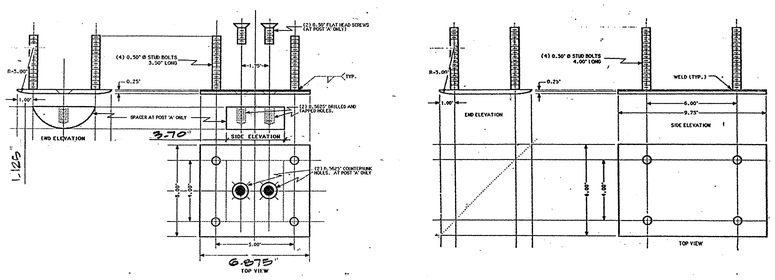

AT POSTS A & B

AT POSTS C & D

CLOSURE PL'S AT UPPER CASTINGS

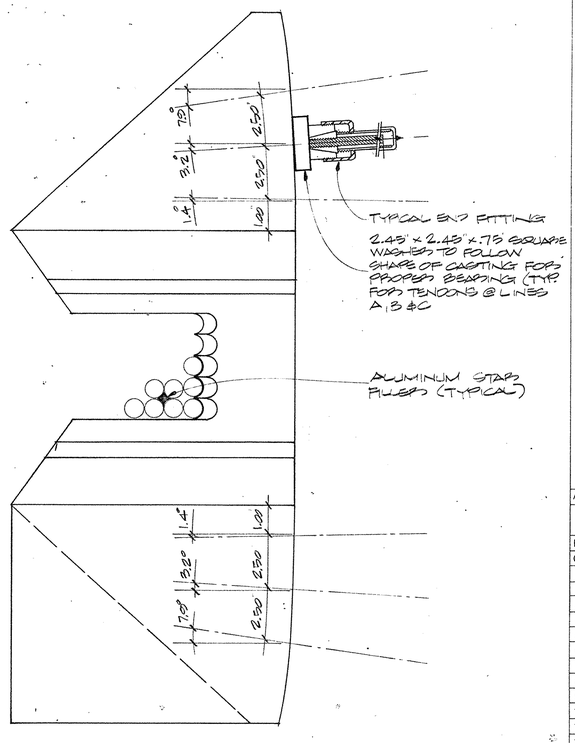

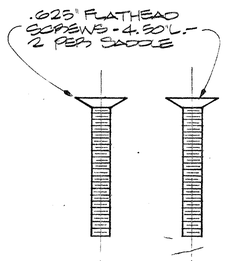

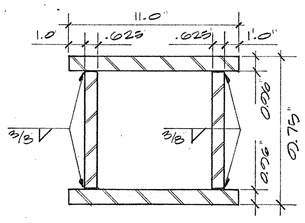

FILLER TUBE AT LOWER CASTING B & C

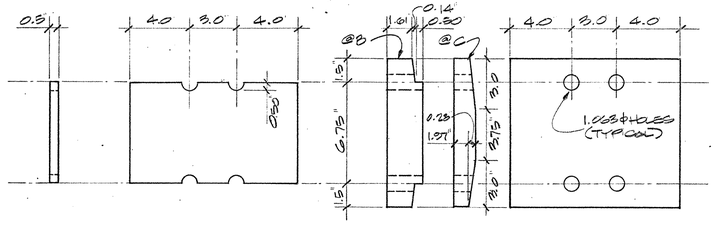

FILLER PL AT POST - 'A'

POST B & C TUBE BRG. PLATE DETAILS

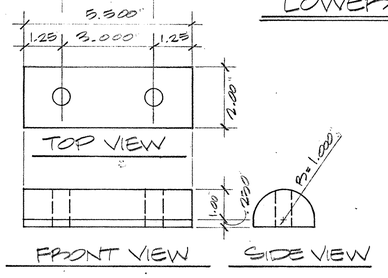

WIRE ROPE SADDLE - 2 FOR POST 'A' ONLY

COLUMN	β°
P1	-6.253°
P2, 24	-6.04°
P3, 23	-5.41°
P4, 22	-4.42°
P5, 21	-3.12°
P6, 20	-1.62°
P7, 19	0
P8, 18	1.62°
P9, 17	3.12
P10, 16	4.42
P11, 15	5.41
P12, 14	6.04
P13	6.253

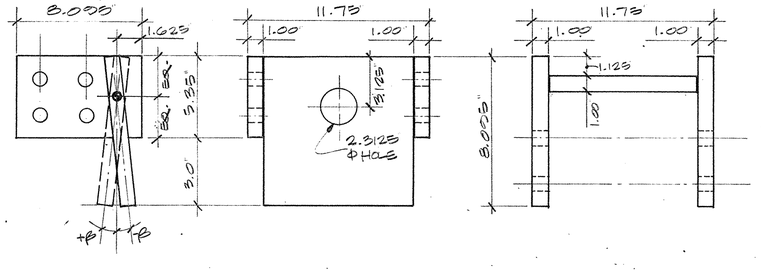

RIGGING CONNECTION @ LOWER CASTING

NOTES-LEGEND

KKBNA/PC — STRUCTURAL, MECHANICAL, ELECTRICAL, PLUMBING ENGINEERS
711 Fifth Avenue, New York, New York 10011, 212-242-0900

POST, BUCKLEY, SCHUH & JERNIGAN, INC. — CONSULTING CIVIL ENGINEERS AND PLANNERS
400 First Avenue North, Suite 800, St. Petersburg, Florida 33701, 813-446-7275

HELLMUTH, OBATA & KASSABAUM, INC. — ARCHITECTURE, INTERIORS, PLANNING, GRAPHICS, ENGINEERING
323 WEST EIGHTH STREET, SUITE 200, KANSAS CITY, MISSOURI 64105, 816-221-1576

THE JONNER-ROSE GROUP — CONSULTANTS IN ACOUSTICS
4105 Centurion Way, Dallas, Texas 75244, 214-392-7800

1st SPORT

CONSTRUCTION PACKAGE 3B- PART 2
PRECAST STADIUM STRUCTURE & ROOF STRUCTURE
SCOPE APPROVAL 3/17/87

KEY PLAN (D C / A B / R1)

THE STADIUM
One Booker Creek Place
St. Petersburg, Pinellas County, Florida

Approval Dates	Owner	Owner Rep.	Construct. Manager	Architect Consult.
DD	11-21-86	11-21-86	11-21-86	11-21-86
CD				
1				
2				
3				
4				
5				
6				
7				
8				
9				
10				
11				
12				
13				
14				
15				
16				
17				
18				

Project No. 4008-001/9541.01

Drawn	Reviewed	Issued

Revisions DD 3-26-86

No.	Description	Date
1		
2		
3		
4		
5		
6		
7		
8		
9		
10		
11		
12		
13		
14		
15		
16		
17		
18		

Category — Sub-Cat. — Sheet: 3.8D-1

DETAILS OF CASTINGS

ACOUSTICAL | STRUCTURAL | PLUMBING | ELECTRICAL | MECHANICAL | OTHER | NOTE | FINISH | WALL | GRID | TITLE T | LEVEL/QUADRANT | OVERLAY DATE

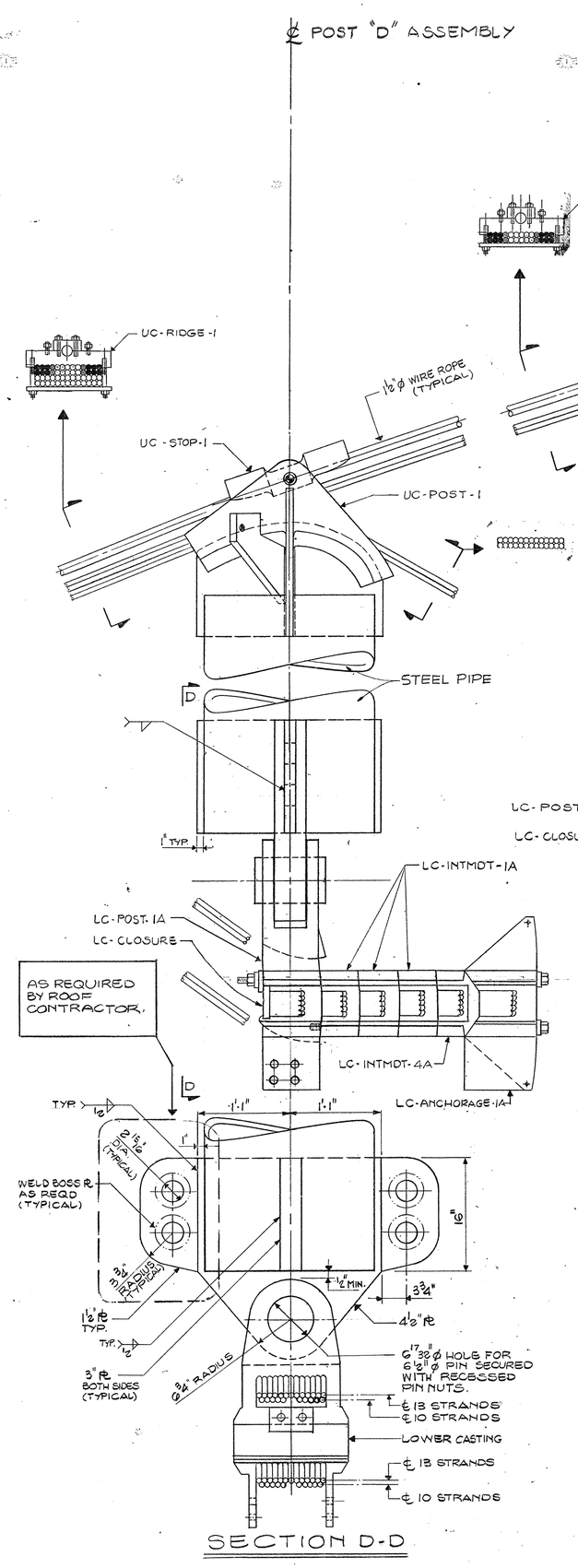

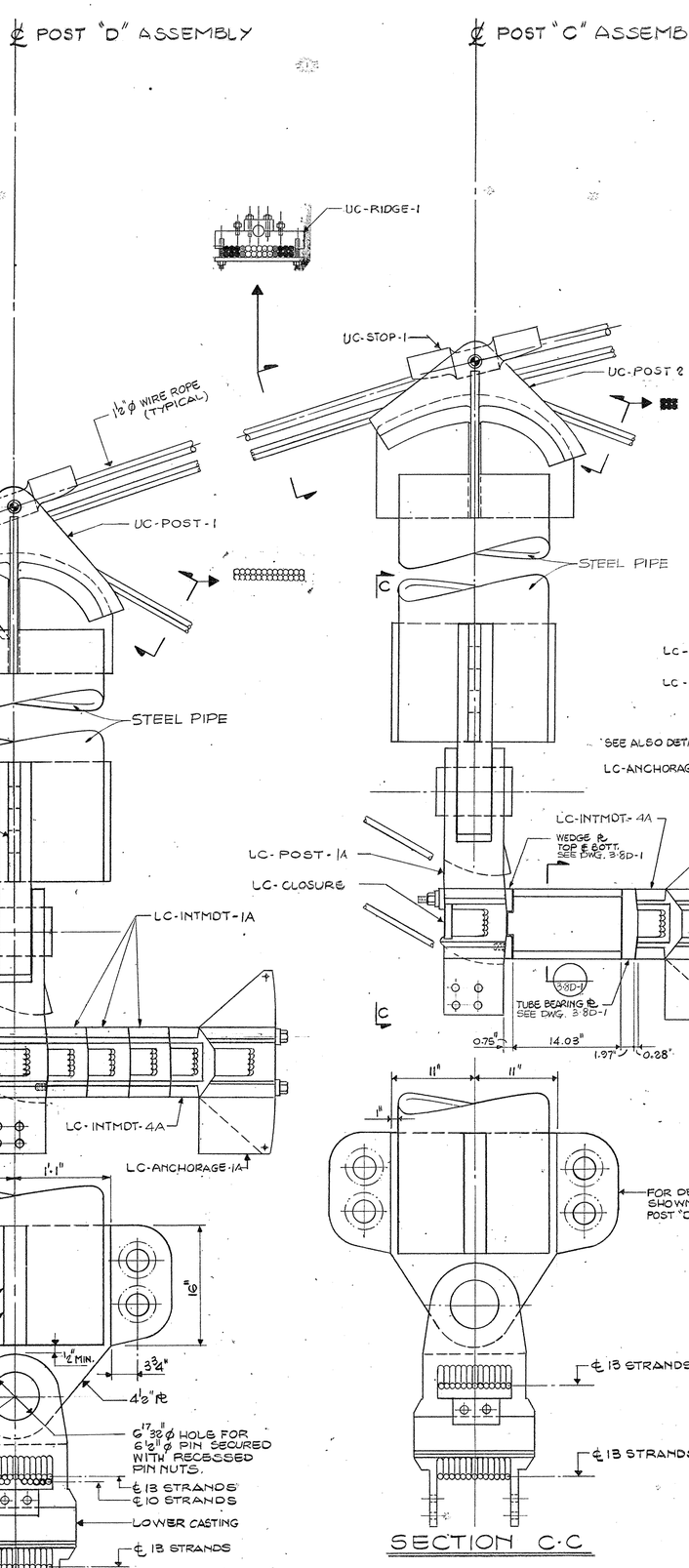

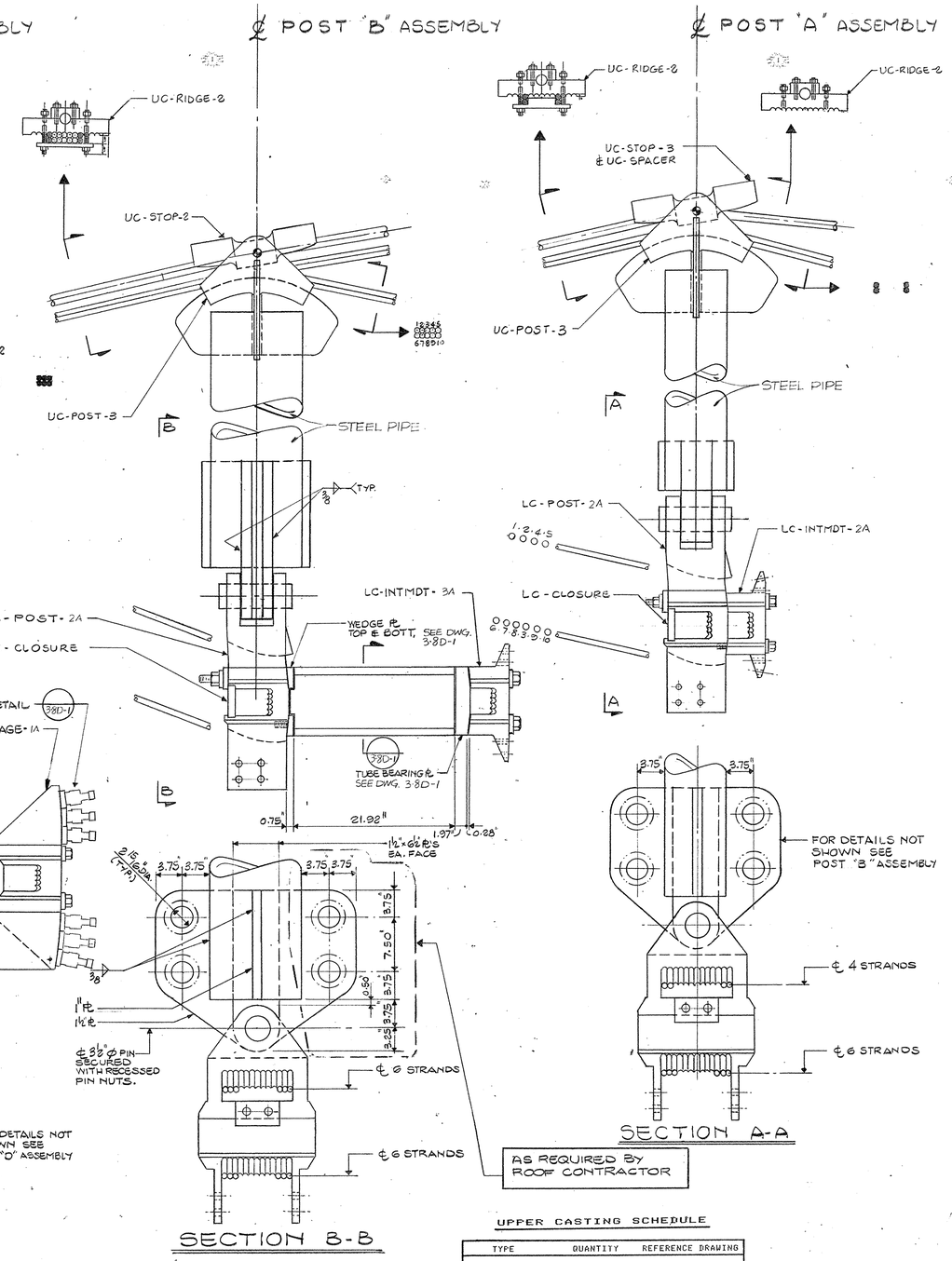

UPPER CASTING SCHEDULE

TYPE	QUANTITY	REFERENCE DRAWING
UC-POST-1	24	3.8B-2
UC-POST-2	24	3.8B-2
UC-POST-3	48	3.8B-1
UC-STOP-1	48	3.8B-2
UC-STOP-2	24	3.8B-1
UC-STOP-3	24	3.8B-1

LOWER CASTING SCHEDULE

TYPE	QUANTITY	REFERENCE DRAWING
LC-POST-1A	42	3.8A-1
LC-POST-2A	43	3.8A-2
LC-POST-1B	2	3.8A-3
LC-POST-2B	2	3.8A-4
LC-POST-1C	2	3.8A-5
LC-POST-2C	2	3.8A-6
LC-POST-1D	2	3.8A-7
LC-POST-2D	1	3.8A-8
LC-CLOSURE	96	3.8A-1
LC-INTMDT-1A	66	3.8A-9
LC-INTMDT-2A	22	3.8A-10
LC-INTMDT-3A	22	3.8A-10
LC-INTMDT-4A	44	3.8A-9
LC-INTMDT-1B	3	3.8A-11
LC-INTMDT-2B	1	3.8A-12
LC-INTMDT-3B	1	3.8A-12
LC-INTMDT-4B	2	3.8A-11
LC-INTMDT-1C	3	3.8A-13
LC-INTMDT-2C	1	3.8A-14
LC-INTMDT-3C	1	3.8A-14
LC-INTMDT-4C	2	3.8A-13
LC-ANCHORAGE-1A	42	3.8A-15
LC-ANCHORAGE-1B	2	3.8A-16
LC-ANCHORAGE-1C	2	3.8A-17
LC-ANCHORAGE-1D	2	3.8A-18

GENERAL NOTES

A. ERECTOR SHALL SUPPORT CENTER RING AT ELEVATION 260' ± DURING ERECTION OF OF THE CABLES .

NOTES-LEGEND

CONSTRUCTION PACKAGE 3B- PART 2
PRECAST STADIUM STRUCTURE & ROOF STRUCTURE
SCOPE APPROVAL 3/17/87

TYPICAL CABLE TRUSS ASSEMBLY DETAI

KKGNA/PC
STRUCTURAL, MECHANICAL, ELECTRICAL, PLUMBING ENGINEERS
711 Fifth Avenue
New York, New York 10017
212-242-0900

POST, BUCKLEY, SCHUH & JERNIGAN, INC.
CONSULTING CIVIL ENGINEERS AND PLANNERS
215 East Bronough Street
Post Office Box 1076
Tallahassee, Florida 32301
813-448-7276

THE JONES-ROSE GROUP
LANDSCAPE ARCHITECTS
4121 Centurion Way
Dallas, Texas 75234
214-392-7500

HELLMUTH, OBATA & KASSABAUM, INC.
ARCHITECTURE, INTERIORS, PLANNING
ONE MEMORIAL CITY PLAZA
3535 WEST EIGHTH STREET
SUITE 700
SAINT LOUIS, MISSOURI 63105
816-221-1070

SPORT

KEY PLAN

THE STADIUM
One Booker Creek Place
St. Petersburg, Pinellas County, Florida

Approval Dates	Owner	Owner Rep.	Construct Manager	Architect Consult.
DD	11-21-86	11-21-86	11-21-86	11-21-86
CD				

Project No. 4008-0017 9541.01

Drawn	Reviewed	Issued

Revisions DD 3-26-86

No.	Description	Date
1		
2		
3		
4		
5		
6		
7		
8		
9		
10		
11		
12		
13		
14		
15		
16		
17		
18		

Category Sub-Cat. Sheet

3.8E-1

STRUCTURAL ACOUSTICAL PLUMBING ELECTRICAL MECHANICAL OTHER NOTE FINISH WALL GRID TITLE LEVEL/QUADRANT OVERLAY DATE

℄ POST "D" ASSEMBLY

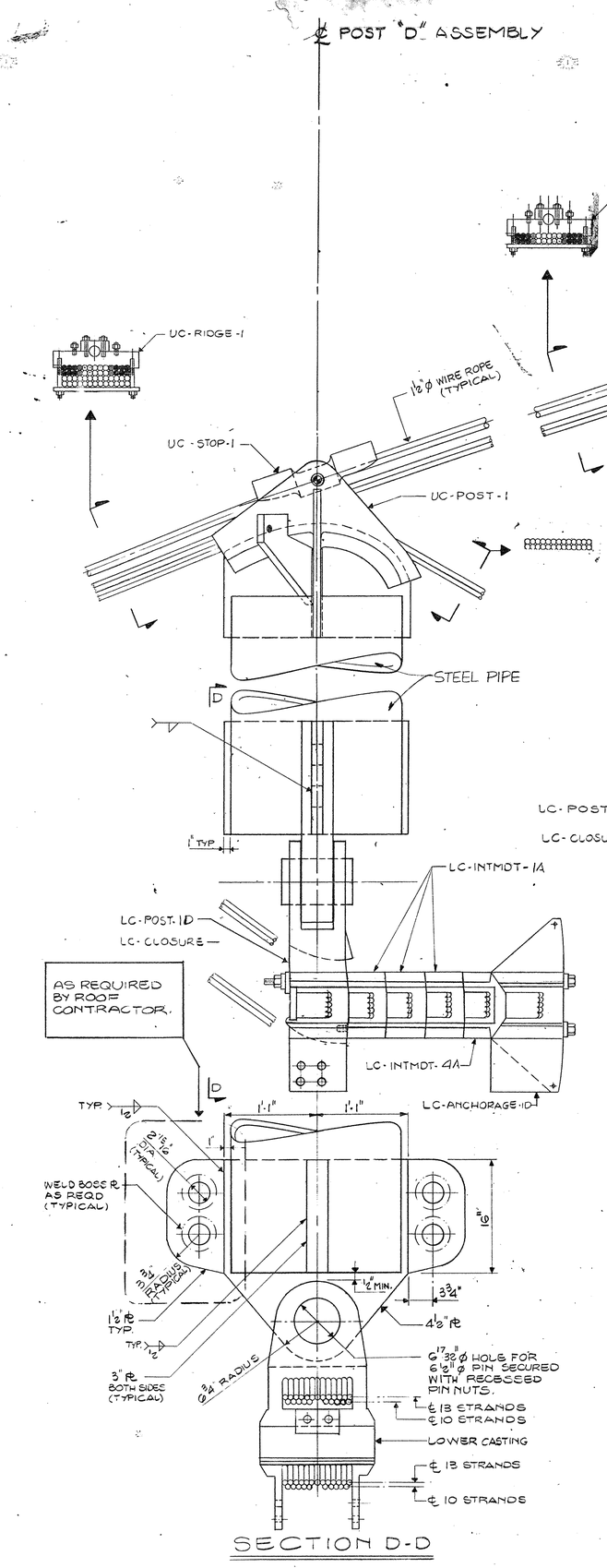

SECTION D-D

℄ POST "C" ASSEMBLY

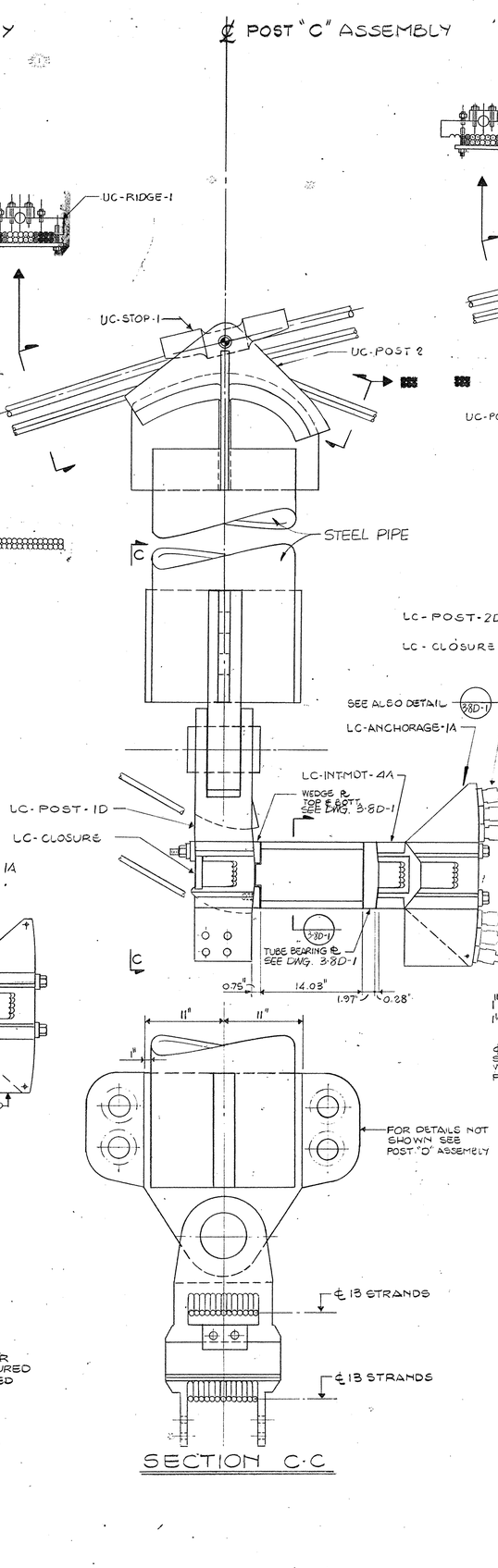

SECTION C-C

℄ POST "B" ASSEMBLY

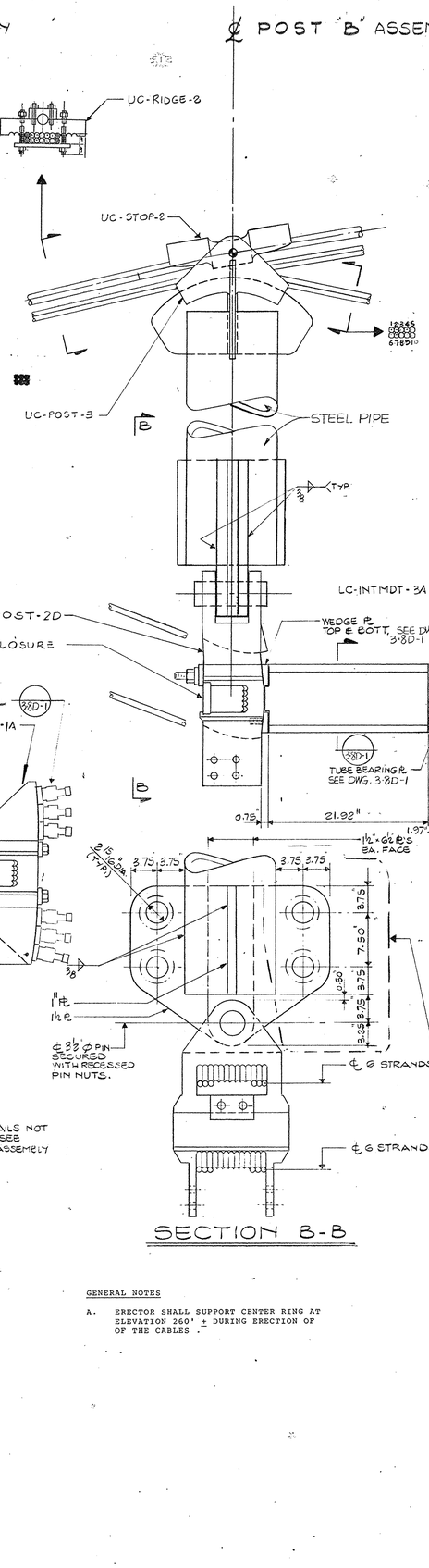

SECTION B-B

℄ POST "A" ASSEMBLY

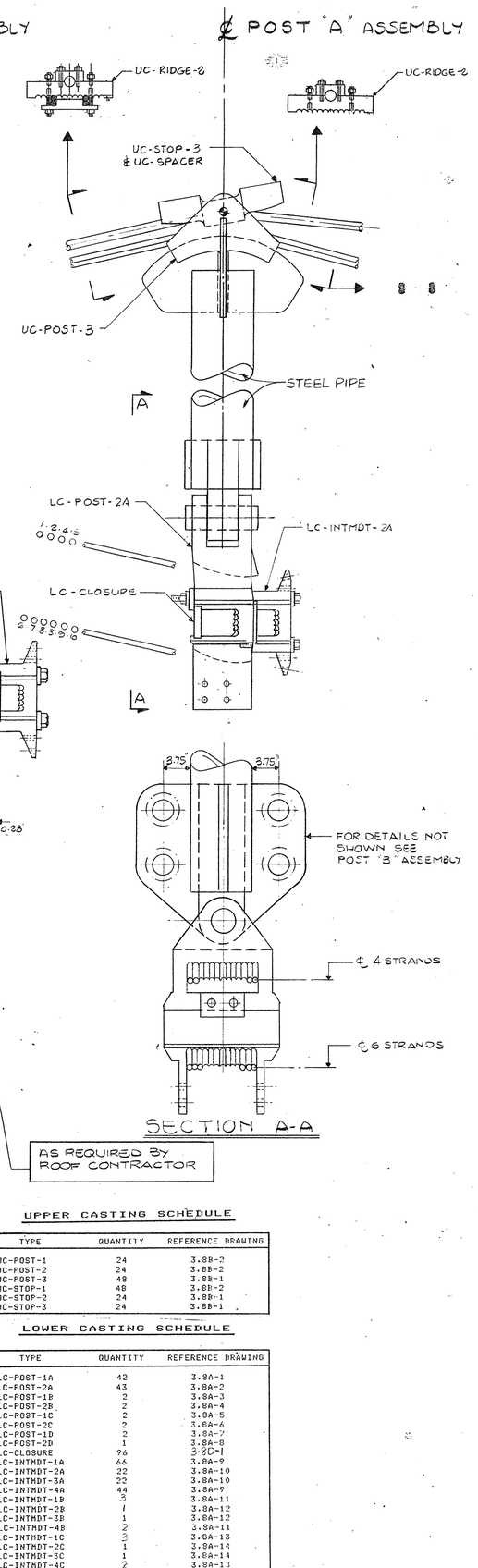

SECTION A-A

AS REQUIRED BY ROOF CONTRACTOR

UPPER CASTING SCHEDULE

TYPE	QUANTITY	REFERENCE DRAWING
UC-POST-1	24	3.8B-2
UC-POST-2	24	3.8B-2
UC-POST-3	48	3.8B-1
UC-STOP-1	48	3.8B-2
UC-STOP-2	24	3.8B-1
UC-STOP-3	24	3.8B-1

LOWER CASTING SCHEDULE

TYPE	QUANTITY	REFERENCE DRAWING
LC-POST-1A	42	3.8A-1
LC-POST-2A	43	3.8A-2
LC-POST-1B	2	3.8A-3
LC-POST-2B	2	3.8A-4
LC-POST-1C	2	3.8A-5
LC-POST-2C	2	3.8A-6
LC-POST-1D	2	3.8A-7
LC-POST-2D	1	3.8A-8
LC-CLOSURE	96	3.8D-1
LC-INTMDT-1A	66	3.8A-9
LC-INTMDT-2A	22	3.8A-10
LC-INTMDT-3A	22	3.8A-10
LC-INTMDT-4A	44	3.8A-9
LC-INTMDT-1B	3	3.8A-11
LC-INTMDT-2B	1	3.8A-12
LC-INTMDT-3B	1	3.8A-12
LC-INTMDT-4B	2	3.8A-11
LC-INTMDT-1C	3	3.8A-13
LC-INTMDT-2C	1	3.8A-14
LC-INTMDT-3C	1	3.8A-14
LC-INTMDT-4C	2	3.8A-13
LC-ANCHORAGE-1A	42	3.8A-15
LC-ANCHORAGE-1B	2	3.8A-16
LC-ANCHORAGE-1C	2	3.8A-17
LC-ANCHORAGE-1D	2	3.8A-18

GENERAL NOTES

A. ERECTOR SHALL SUPPORT CENTER RING AT ELEVATION 260' ± DURING ERECTION OF OF THE CABLES .

NOTES-LEGEND

CONSTRUCTION PACKAGE 3B- PART 2
PRECAST STADIUM STRUCTURE & ROOF STRUCTURE
SCOPE APPROVAL 3/17/87

KKBNA/PC
STRUCTURAL, MECHANICAL, ELECTRICAL, PLUMBING ENGINEERS
199 Fifth Avenue
New York, New York 10011 212-242-0990

POST, BUCKLEY, SCHUH & JERNIGAN, INC.
CONSULTING CIVIL ENGINEERS AND PLANNERS
One Progress Plaza
St. Petersburg, Florida 33701 813-446-7276

THE JONES-ROSE GROUP
CONSULTANTS IN ACOUSTICS
4701 Commerce Way
Dallas, Texas 75234 214-392-7300

HELLMUTH, OBATA & KASSABAUM, INC.
ARCHITECTURE, INTERIORS, PLANNING
ENGINEERING, MANAGEMENT
323 WEST EIGHTH STREET
SUITE E 90
KANSAS CITY, MISSOURI 64105
816-221-1870

hlk SPORT

KEY PLAN

THE STADIUM
One Booker Creek Place
St. Petersburg, Pinellas County, Florida

Approval Dates	Owner	Owner Rep.	Construct. Manager	Architect Consult.
DD	11-21-86	11-21-86	11-21-86	11-21-86
CD				

Project No. 4008-001/9541.01

Drawn	Reviewed	Issued

Revisions DD 3-26-86

No.	Description	Date
1		
2		
3		
4		
5		
6		
7		
8		
9		
10		
11		
12		
13		
14		
15		
16		
17		
18		

Category — Sub-Cat. — Sheet

3.8E-2

CABLE TRUSS AT COLUMN LINE R1 ASSEMBLY DETAILS

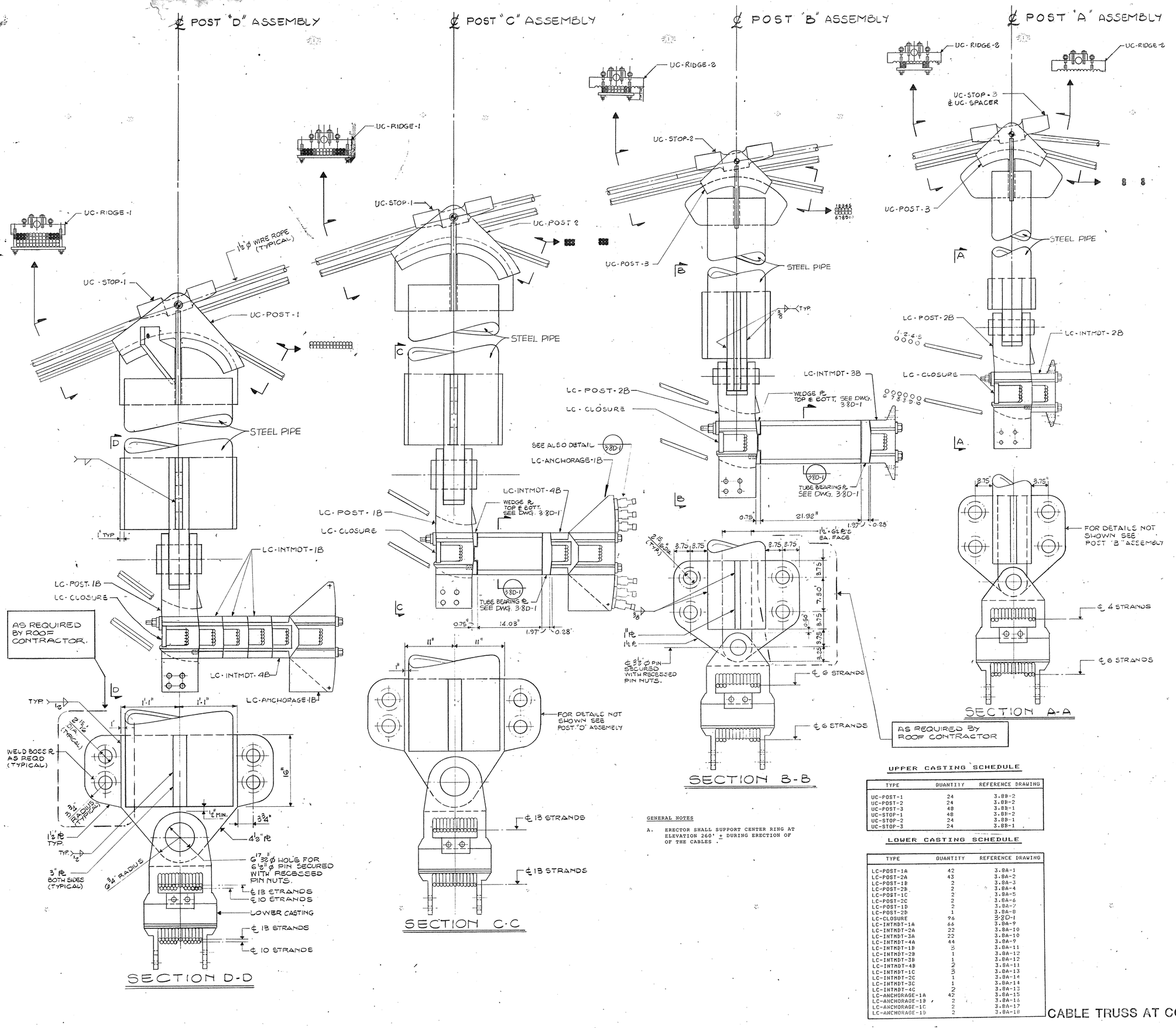

GENERAL NOTES

A. ERECTOR SHALL SUPPORT CENTER RING AT ELEVATION 260' ± DURING ERECTION OF OF THE CABLES .

UPPER CASTING SCHEDULE

TYPE	QUANTITY	REFERENCE DRAWING
UC-POST-1	24	3.8B-2
UC-POST-2	24	3.8B-2
UC-POST-3	48	3.8B-1
UC-STOP-1	48	3.8B-2
UC-STOP-2	24	3.8B-1
UC-STOP-3	24	3.8B-1

LOWER CASTING SCHEDULE

TYPE	QUANTITY	REFERENCE DRAWING
LC-POST-1A	42	3.8A-1
LC-POST-2A	43	3.8A-2
LC-POST-1B	2	3.8A-3
LC-POST-2B	2	3.8A-4
LC-POST-1C	2	3.8A-5
LC-POST-2C	2	3.8A-6
LC-POST-1D	2	3.8A-7
LC-POST-2D	1	3.8A-8
LC-CLOSURE	96	3.8D-1
LC-INTMDT-1A	66	3.8A-9
LC-INTMDT-2A	22	3.8A-10
LC-INTMDT-3A	22	3.8A-10
LC-INTMDT-4A	44	3.8A-9
LC-INTMDT-1B	2	3.8A-11
LC-INTMDT-2B	1	3.8A-12
LC-INTMDT-3B	1	3.8A-12
LC-INTMDT-4B	2	3.8A-11
LC-INTMDT-1C	2	3.8A-13
LC-INTMDT-2C	1	3.8A-14
LC-INTMDT-3C	1	3.8A-14
LC-INTMDT-4C	2	3.8A-13
LC-ANCHORAGE-1A	42	3.8A-15
LC-ANCHORAGE-1B	2	3.8A-16
LC-ANCHORAGE-1C	2	3.8A-17
LC-ANCHORAGE-1D	2	3.8A-18

CABLE TRUSS AT COLUMN LINE R7 ASSEMBLY DETAILS

NOTES-LEGEND

CONSTRUCTION PACKAGE 3B- PART 2
PRECAST STADIUM STRUCTURE & ROOF STRUCTURE
SCOPE APPROVAL 3/17/87

KKBNA/PC
STRUCTURAL, MECHANICAL, ELECTRICAL, PLUMBING ENGINEERS
One Park Place, Suite 1011
Fort Worth, Texas 76102 817-335-8880

POST, BUCKLEY, SCHUH & JERNIGAN, INC.
CIVIL, STRUCTURAL, ENVIRONMENTAL AND PLUMBING ENGINEERS
250 Pine Avenue, North
St. Petersburg, Florida 33701 813-446-7278

HELLMUTH, OBATA & KASSABAUM, INC.
ARCHITECTURE, PLANNING, INTERIORS, & GRAPHICS, ENGINEERING
323 WEST EIGHTH STREET
SUITE 200
KANSAS CITY, MISSOURI 64105
816-221-1876

THE JOINER-ROSE GROUP
CONSULTANTS IN ACOUSTICS
Dallas, Texas 75234 214-392-7400

SPORT

KEY PLAN

THE STADIUM
One Booker Creek Place
St. Petersburg, Pinellas County, Florida

Approval Dates	Owner	Owner Rep.	Construct. Manager	Architect Consult.
DD	11-21-86	11-21-86	11-21-86	11-21-86
CD				

Project No. 4008-001 9541.01

Drawn	Reviewed	Issued

Revisions DD 3-26-86

No.	Description	Date
1		
2		
3		
4		
5		
6		
7		
8		
9		
10		
11		
12		
13		
14		
15		
16		
17		
18		

Category Sub-Cat. Sheet
3.8E-3

STRUCTURAL ACOUSTICAL PLUMBING ELECTRICAL MECHANICAL OTHER NOTE FINISH WALL GRID TITLE LEVEL/QUADRANT OVERLAY DATE

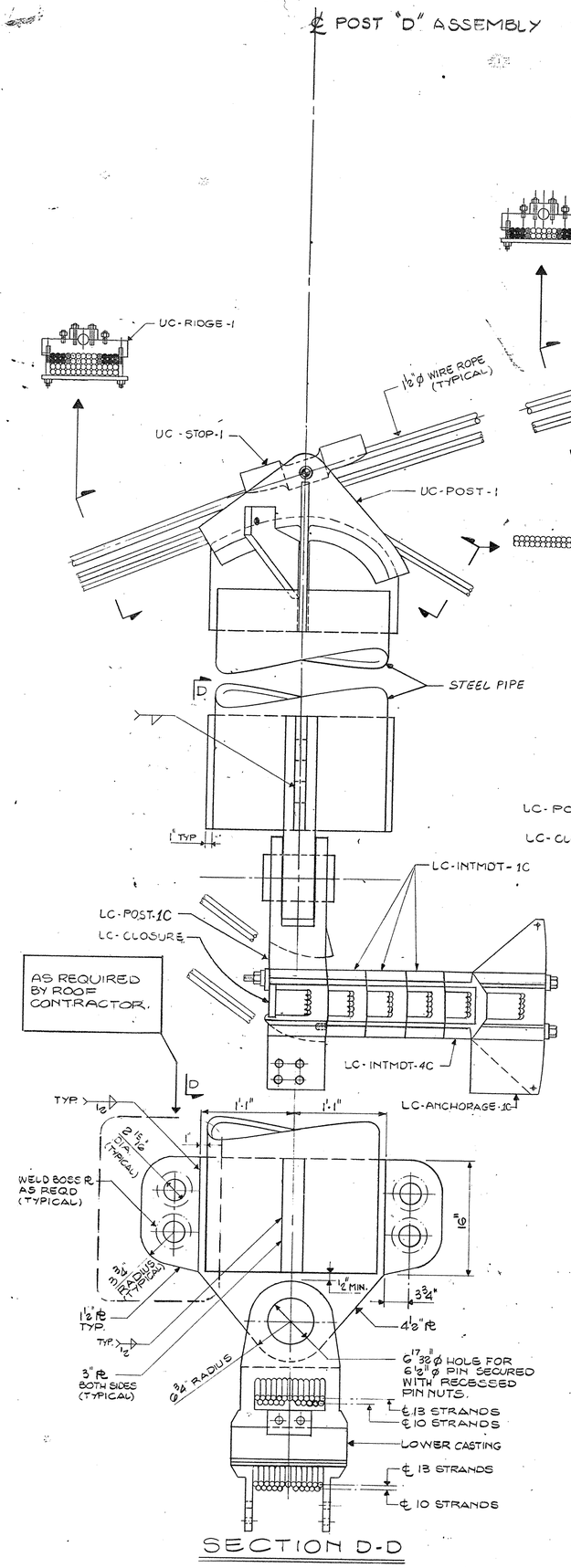

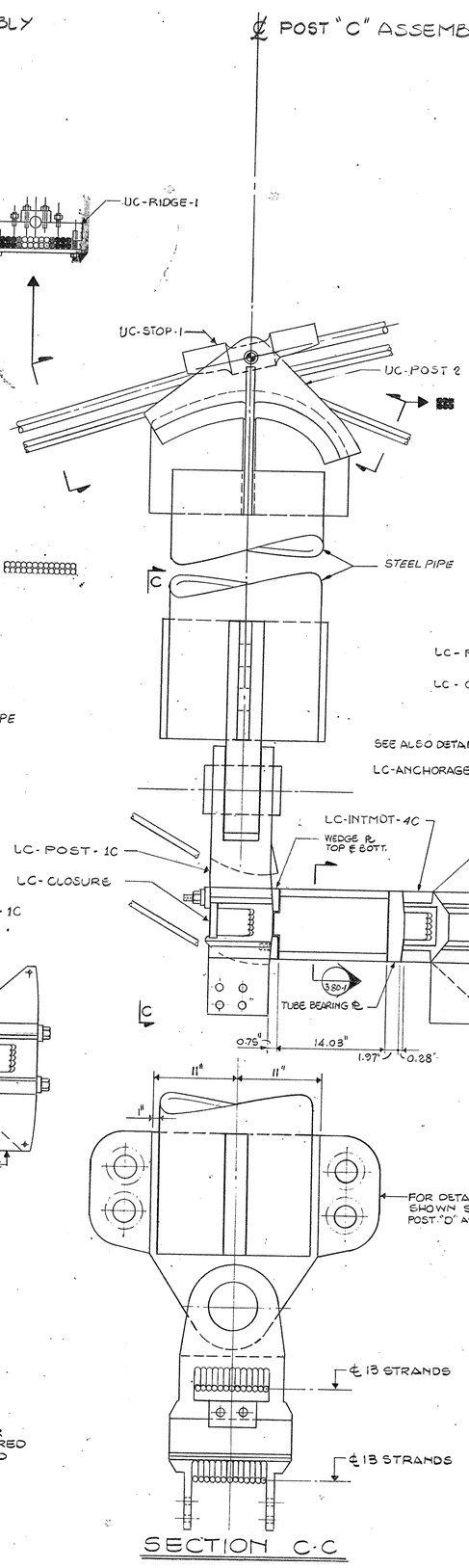

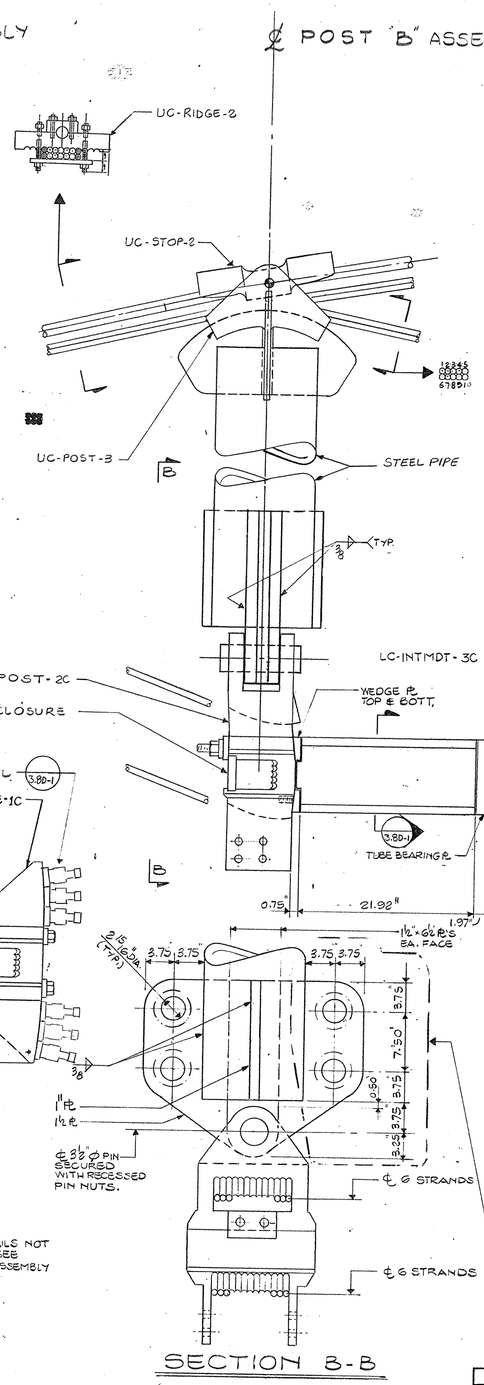

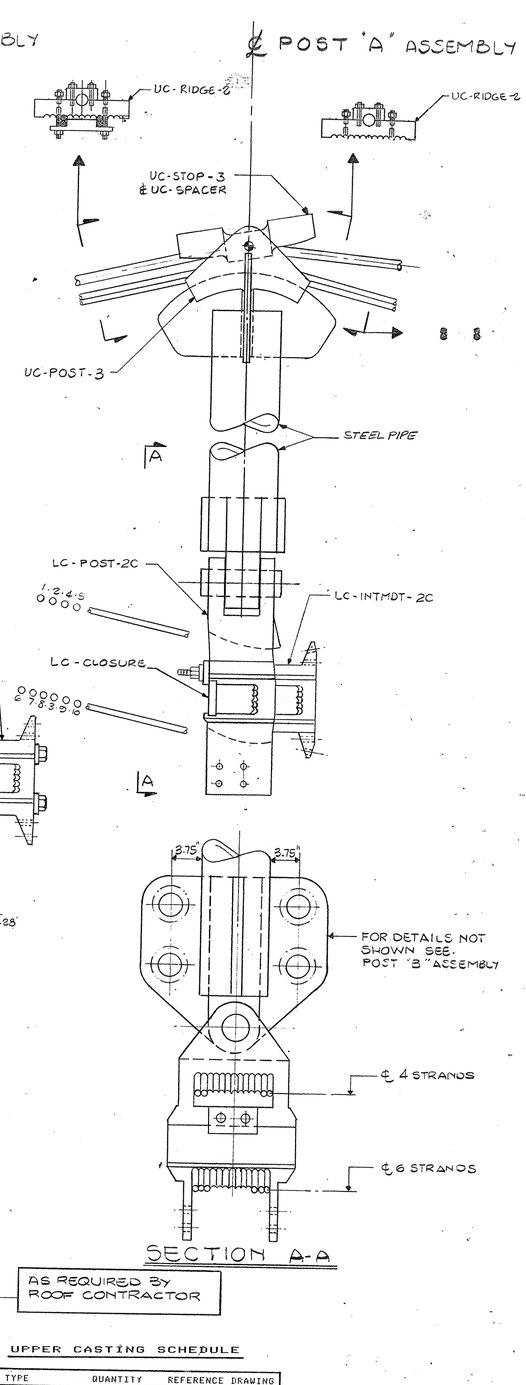

GENERAL NOTES

A. ERECTOR SHALL SUPPORT CENTER RING AT ELEVATION 260' ± DURING ERECTION OF OF THE CABLES .

UPPER CASTING SCHEDULE

TYPE	QUANTITY	REFERENCE DRAWING
UC-POST-1	24	3.8B-2
UC-POST-2	24	3.8B-2
UC-POST-3	48	3.8B-1
UC-STOP-1	48	3.8B-2
UC-STOP-2	24	3.8B-1
UC-STOP-3	24	3.8B-1

LOWER CASTING SCHEDULE

TYPE	QUANTITY	REFERENCE DRAWING
LC-POST-1A	42	3.8A-1
LC-POST-2A	43	3.8A-2
LC-POST-1B	2	3.8A-3
LC-POST-2B	2	3.8A-4
LC-POST-1C	2	3.8A-5
LC-POST-2C	2	3.8A-6
LC-POST-1D	2	3.8A-7
LC-POST-2D	1	3.8A-8
LC-CLOSURE	96	3.8D-1
LC-INTMDT-1A	66	3.8A-9
LC-INTMDT-2A	22	3.8A-10
LC-INTMDT-3A	22	3.8A-10
LC-INTMDT-4A	44	3.8A-9
LC-INTMDT-1B	3	3.8A-11
LC-INTMDT-2B	1	3.8A-12
LC-INTMDT-3B	1	3.8A-12
LC-INTMDT-4B	2	3.8A-11
LC-INTMDT-1C	5	3.8A-13
LC-INTMDT-2C	1	3.8A-14
LC-INTMDT-3C	1	3.8A-14
LC-INTMDT-4C	2	3.8A-13
LC-ANCHORAGE-1A	42	3.8A-15
LC-ANCHORAGE-1B	2	3.8A-16
LC-ANCHORAGE-1C	2	3.8A-17
LC-ANCHORAGE-1D	2	3.8A-18

NOTES-LEGEND

CONSTRUCTION PACKAGE 3B- PART 2
PRECAST STADIUM STRUCTURE & ROOF STRUCTURE
SCOPE APPROVAL 3/17/87

KKNA/PC
STRUCTURAL, MECHANICAL, ELECTRICAL, PLUMBING ENGINEERS
99 Hudson Street, 5th Floor, New York, New York 10013 212-242-2980

POST, BUCKLEY, SCHUH & JERNIGAN, INC.
CONSULTING CIVIL ENGINEERS AND PLANNERS
One Progress Plaza, Suite 1000, St. Petersburg, Florida 33701 813-446-7276

THE JONER-ROSE GROUP
ACOUSTICAL CONSULTANTS
4924 Cambridge Way, Dallas, Texas 75234 214-352-7800

HELLMUTH, OBATA & KASSABAUM, INC.
ARCHITECTURE, INTERIORS, PLANNING
323 WEST EIGHTH STREET, SUITE 500, KANSAS CITY, MISSOURI 64105 816-221-1876

hok SPORT

KEY PLAN

THE STADIUM
One Booker Creek Place
St. Petersburg, Pinellas County, Florida

Approval Dates	Owner	Owner Rep.	Construct. Manager	Architect Consult.
DD	11-21-86	11-21-86	11-21-86	11-21-86
CD				

Project No. 4008-00179541.01

Drawn	Reviewed	Issued
Revisions DD 3-26-86		

No.	Description	Date
1		
2		
3		
4		
5		
6		
7		
8		
9		
10		
11		
12		
13		
14		
15		
16		
17		
18		

Category — Sub-Cat. — Sheet

3.8E-4

CABLE TRUSS AT COLUMN LINE R19 ASSEMBLY DETAILS

ACOUSTICAL
STRUCTURAL
PLUMBING
ELECTRICAL
MECHANICAL
OTHER
NOTE
FINISH
WALL
GRID
TITLE
OVERLAY DATE
LEVEL/QUADRANT

NOTES – LEGEND

KKBNA/PC ENGINEERS
STRUCTURAL, MECHANICAL, ELECTRICAL, PLUMBING
114 Fifth Avenue
New York, New York 10011 212-242-0300

POST, BUCKLEY, SCHUH & JERNIGAN, INC.
CONSULTING CIVIL ENGINEERS AND PLANNERS
250 First Avenue South
St. Petersburg, Florida 33701 813-446-7275

THE JOINER-ROSE GROUP
CONSULTANTS IN ACOUSTICS
4125 Centurion Way
Dallas, Texas 75234 214-392-7800

HELLMUTH, OBATA & KASSABAUM, INC.
ARCHITECTURE, INTERIORS, PLANNING,
GRAPHICS, ENGINEERING
1323 WEST EIGHTH STREET
SUITE 700
KANSAS CITY, MISSOURI 64105
816-221-1576

SPORT

KEY PLAN

THE STADIUM
One Booker Creek Place
St. Petersburg, Pinellas County, Florida

Project No. 4008-001/9541.01

Approval Dates	Drawn	Reviewed	Issued
			6-22-87

	Owner	Owner Rep	Contractor	Architect Consult
DD	11/21/86	12/1/86	12/1/86	11/21/86
CD	9-28-87	9-28-87	9-28-87	9-28-87

No.	Revisions Description	Date
1		
2		
3		
4		
5		
6		
7		
8		
9		
10		
11		
12		
13		
14		
15		
16		
17		
18		

Category Sub-Cat Sheet
3.8H-1

CATWALK PLAN & ELEVATION

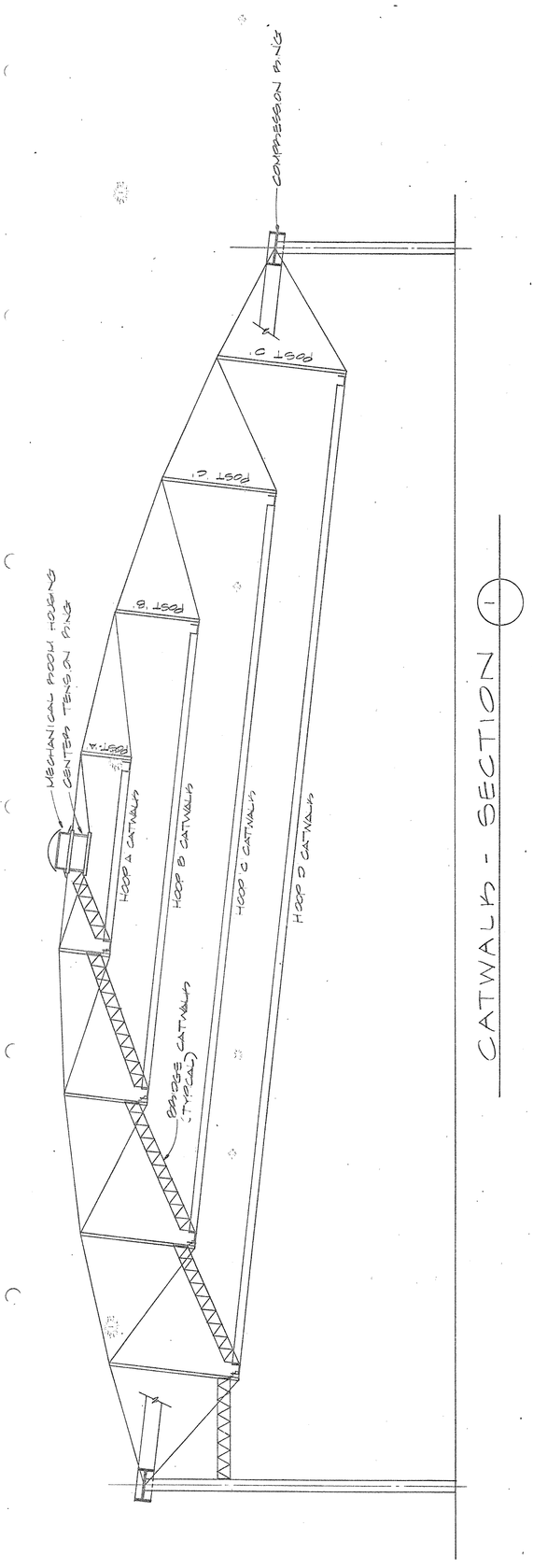

CATWALK - SECTION 1

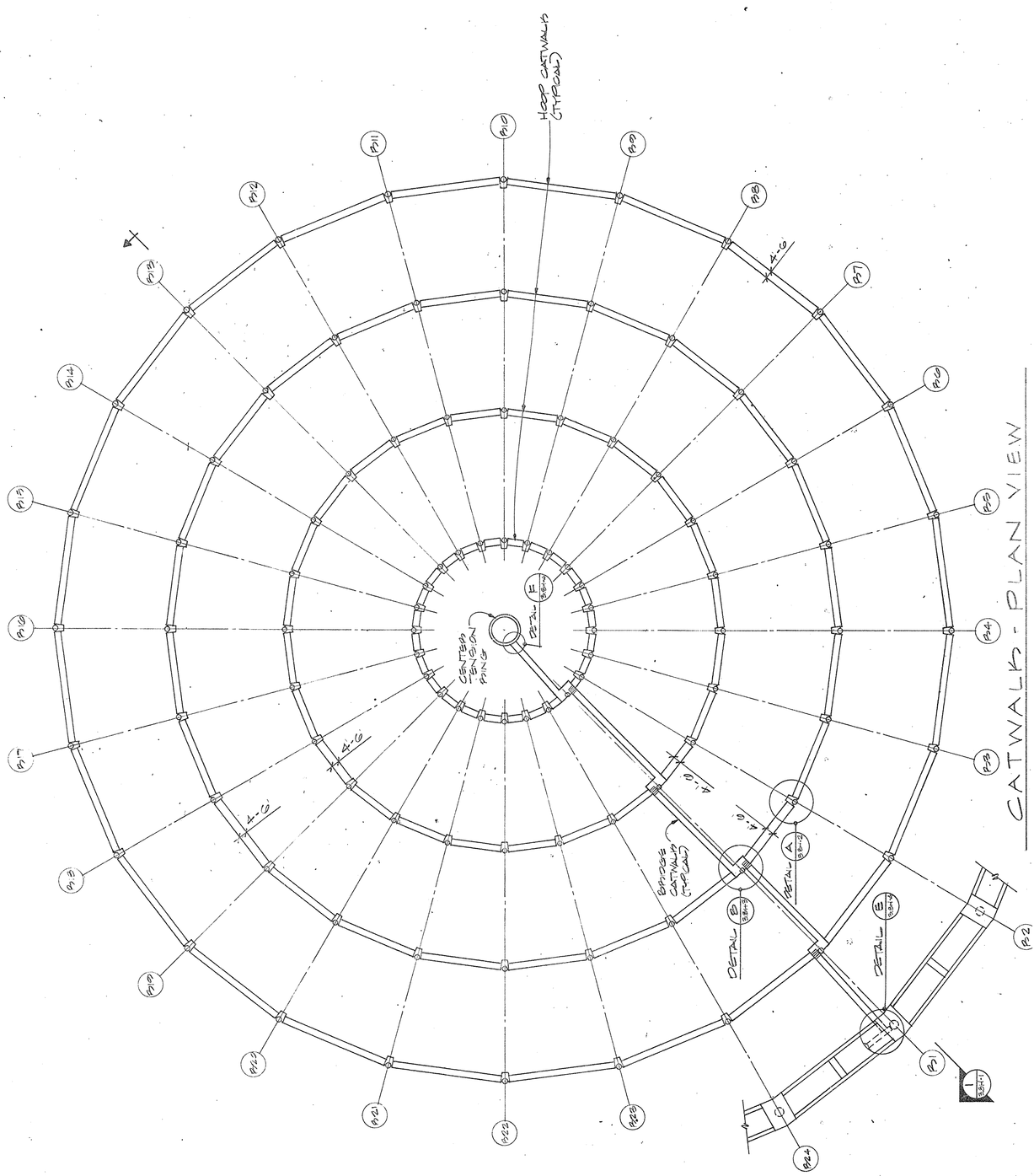

CATWALK - PLAN VIEW

OVERLAY DATE
LEVEL/QUADRANT | TITLE T | GRID | WALL | FINISH | NOTE | OTHER | MECHANICAL | ELECTRICAL | PLUMBING | STRUCTURAL | ACOUSTICAL

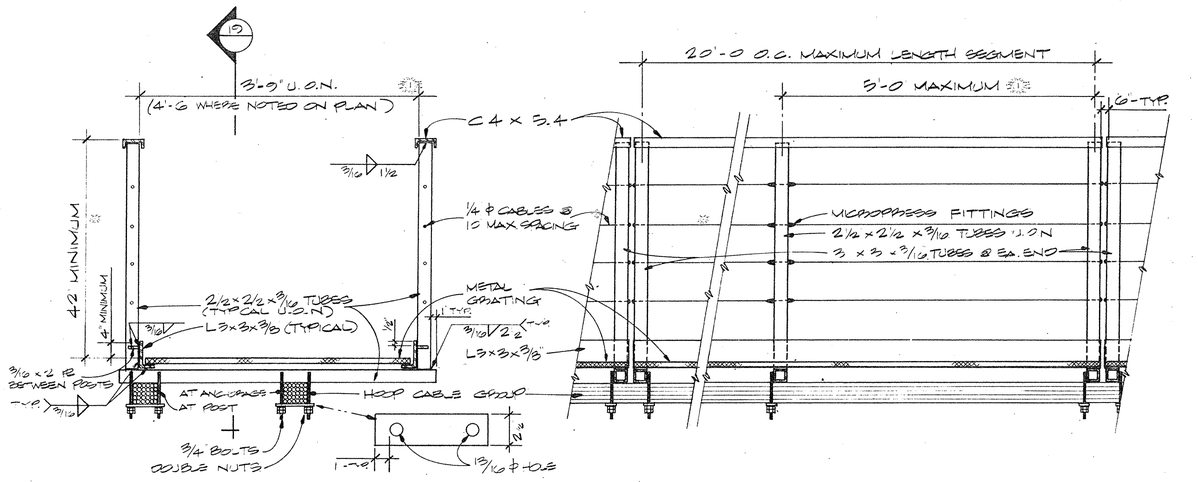

SECTION 19

ELEVATION OF TYPICAL HOOP CATWALK
SEE DETAIL A THIS DRAWING.

SECTION 19

SEE SECTION '18' THIS DRAWING.

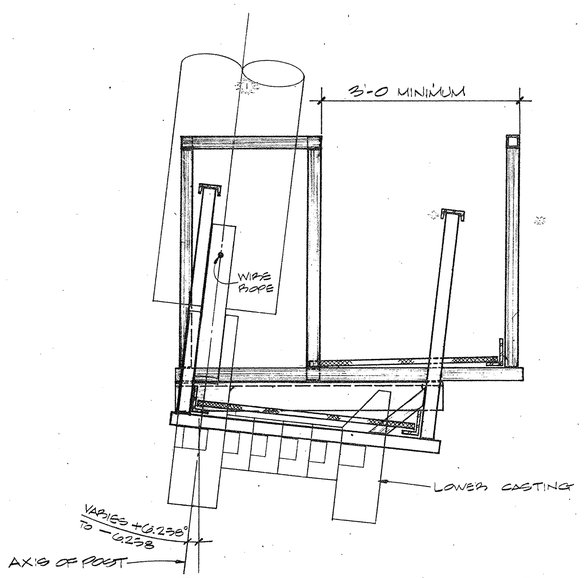

SECTION 20

SEE DETAIL 'A' THIS DRAWING.

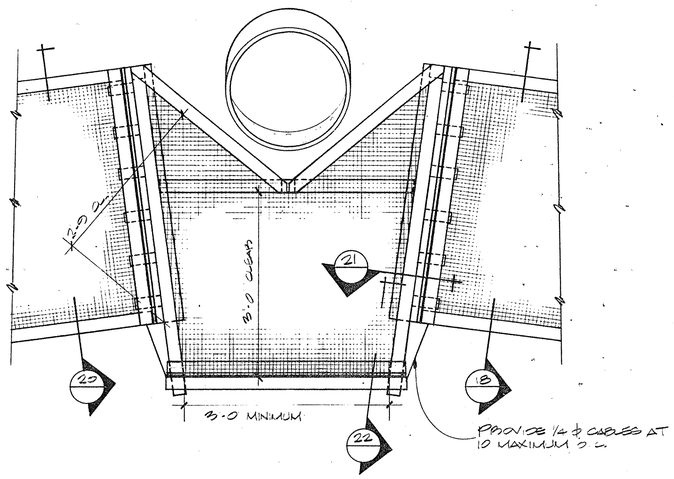

DETAIL A

PLAN VIEW OF TYPICAL HOOP CATWALK LANDING AREA AT POST.
SEE DRAWING 3.8H-1

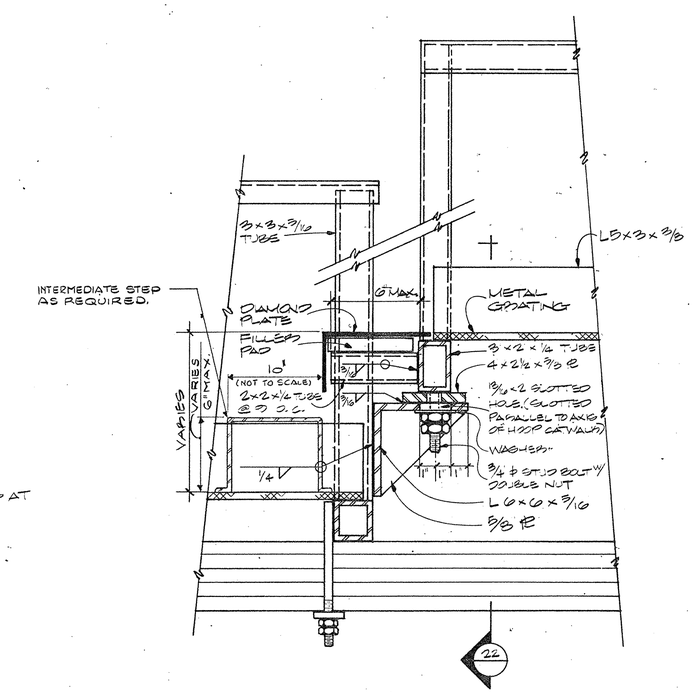

SECTION 21

SEE DETAIL A THIS DRAWING.

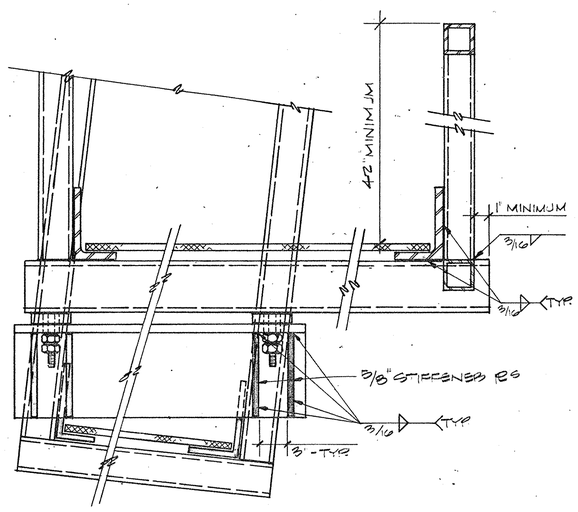

SECTION 22

SEE DETAIL 'A' THIS DRAWING.

NOTES:

1. ELECTRICAL BALLASTS & WIREWAY SHALL BE CONNECTED TO THE VERTICAL TUBE OF THE CATWALK FROM THE OUTSIDE.
2. CONTRACTOR MUST STABILIZE THE 20'-0 SPAN CATWALK DURING ERECTION TO PREVENT BUCKLING OF ANGLES. (SEE SECTION '18' THIS DRAWING.
3. SPECIFICATIONS ISSUED FOR CONSTRUCTION PACKAGE 3B - PART 1, 2 & 3 ARE APPLICABLE TO THIS PACKAGE (3C).
4. STEEL GRATING SHALL HAVE 1" x 3/16" SERRATED BEARING BARS @ 13/16 O.C. W/ CROSS BARS @ 4" O.C. HOT DIPPED GALVANIZED AFTER FABRICATION.

NOTES – LEGEND

KKBNA PC — ENGINEERS
STRUCTURAL, MECHANICAL, ELECTRICAL, PLUMBING
114 Fifth Avenue, New York, New York 10011, 212-242-0900

POST, BUCKLEY, SCHUH & JERNIGAN, INC.
CONSULTING CIVIL ENGINEERS AND PLANNERS
2601 1st Ave. N. Suite 300, St. Petersburg, Florida 33713, 813-446-7275

HELLMUTH, OBATA & KASSABAUM, INC.
ARCHITECTURE, INTERIORS, PLANNING, GRAPHICS, INDUSTRIAL DESIGN
323 WEST EIGHTH STREET, SUITE 700, KANSAS CITY, MISSOURI 64105, 816-221-1570

THE JONES-ROSE GROUP
CONSULTANT FOR ACOUSTICS
4125 Centurion Way, Dallas, Texas 75234, 214-392-7800

hok SPORT

D C A B (R) KEY PLAN

THE STADIUM
One Booker Creek Place
St. Petersburg, Pinellas County, Florida

RECEIVED
JAN 13 1988
GEIGER/KKBNA

Approval Dates	Owner	Owner Rep.	Contractor	Architect Consult
DD	11/21/86	11/21/86	11/21/86	11/21/86
CD	9-28-87	9-28-87	9-28-87	9-28-87

Project No. 4008-001/9541.01

Drawn	Reviewed	Issued
		6-22-87

Revisions		
No.	Description	Da'e
1		
2		
3		
4		
5		
6		
7		
8		
9		
10		
11		
12		
13		
14		
15		
16		
17		
18		

Category	Sub-Cat	Sheet
		3.8H-2

HOOP CATWALK & DETAILS

LEVEL/QUADRANT OVERLAY DATE | TITLE | GRID | WALL | FINISH | NOTE | OTHER | MECHANICAL | ELECTRICAL | PLUMBING | STRUCTURAL | ACOUSTICAL

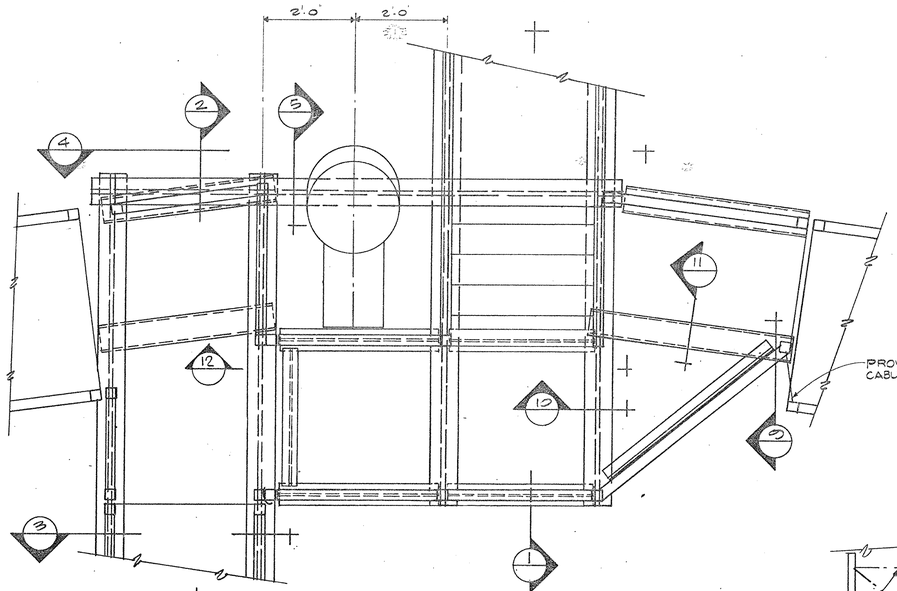

DETAIL (B)

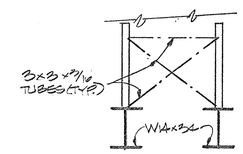

SECTION (22)

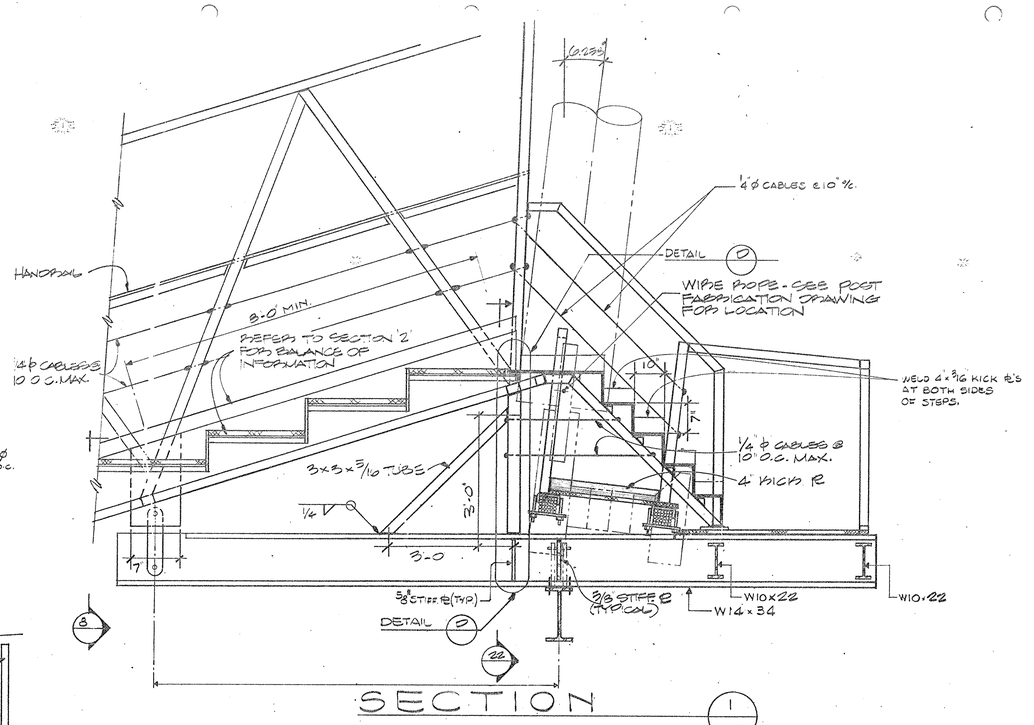

SECTION (1)

CONTRACTOR SHALL MODIFY ENDS OF CATWALK AS NECESSARY

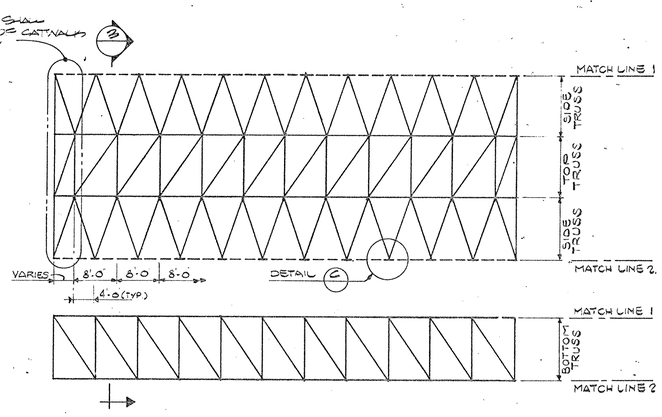

BRIDGE CATWALK TRUSS DIAGRAM

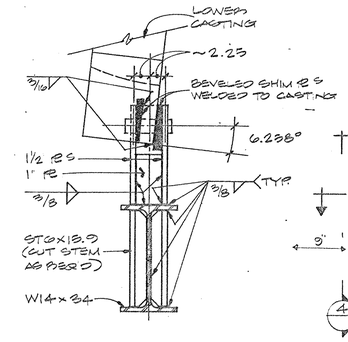

SECTION (3)
SEE SECTION 4, THIS DRAWING AND DETAIL 'B' THIS DRAWING

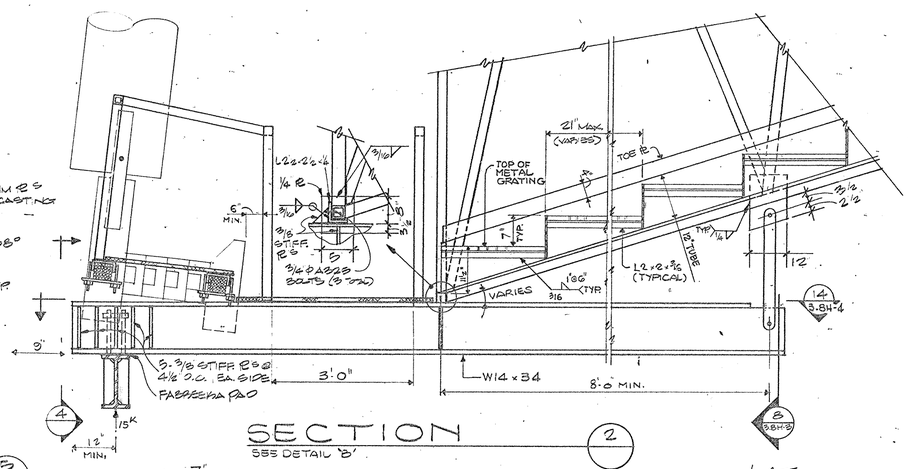

SECTION (2)
SEE DETAIL '8'

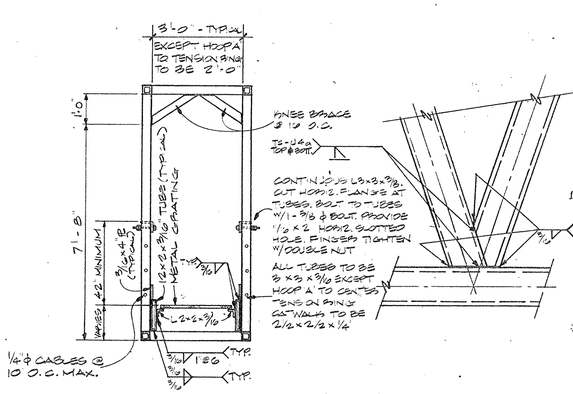

SECTION (3)
SEE BRIDGE CATWALK TRUSS DIAGRAM

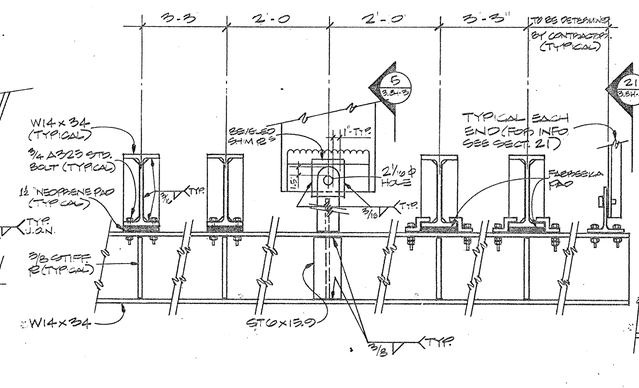

DETAIL (C)
TYPICAL TUBE CONN. FOR BRIDGE CATWALK

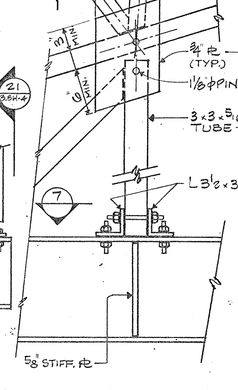

SECTION (4)
SEE SECTION '2', THIS DRAWING.

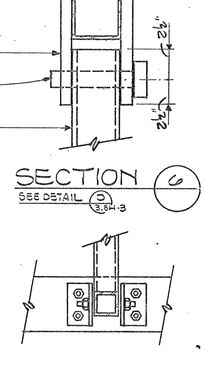

DETAIL (D)
SEE SECTION '1', THIS DRAWING.

SECTION (6)
SEE DETAIL (D) 3.8H-3

SECTION (7)
SEE DETAIL (D) 3.8H-3

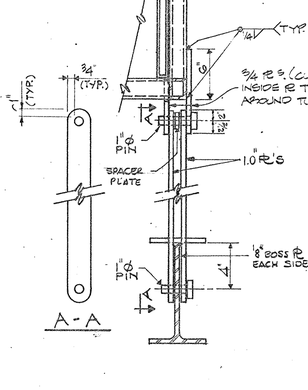

SECTION (8)

NOTES – LEGEND

KKBNA/PC
STRUCTURAL, MECHANICAL, ELECTRICAL, PLUMBING ENGINEERS
11th Fifth Avenue
New York, New York 10011
212-242-0900

POST, BUCKLEY, SCHUH & JERNIGAN, INC.
CIVIL ENGINEERS AND PLANNERS
1401 East Park Ave., Suite 300
St. Petersburg, Florida 33701
813-446-7275

THE JONER-ROSE GROUP
CONSULTANTS IN ACOUSTICS
4135 Centurion Way
Dallas, Texas 75244
214-392-7800

HELLMUTH, OBATA & KASSABAUM, INC.
ARCHITECTS, ENGINEERS, PLANNERS, GRAPHICS, ENGINEERING
1323 WEST EIGHTH STREET
SUITE 210
KANSAS CITY, MISSOURI 64105
816-221-1576

hok SPORT

D C A B

KEY PLAN

THE STADIUM
One Booker Creek Place
St. Petersburg, Pinellas County, Florida

RECEIVED
JAN 13 1988
GENSLER/KKBNA

Approval Dates	Owner	Owner Rep	Contractor	Architect Consult
DD	11/21/86	11/21/86	11/21/86	11/21/86
CD	9-28-87	9-28-87	9-28-87	9-28-87

Project No. 4008-001/9541.01		
Drawn	Reviewed	Issued
		6-22-87

Revisions		
No.	Description	Da'e
1		
2		
3		
4		
5		
6		
7		
8		
9		
10		
11		
12		
13		
14		
15		
16		
17		
18		

Category	Sub-Cat.	Sheet
		3.8H-3

BRIDGE CATWALK & CONNECTION AT POST.

ACOUSTICAL
STRUCTURAL
PLUMBING
ELECTRICAL
MECHANICAL
OTHER
NOTE
FINISH
WALL
REFERENCE

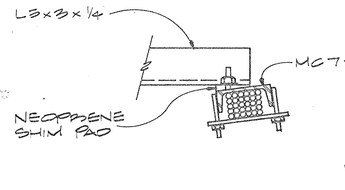

SECTION 9
SEE DETAIL 'B' DRAWING 3.8H-3

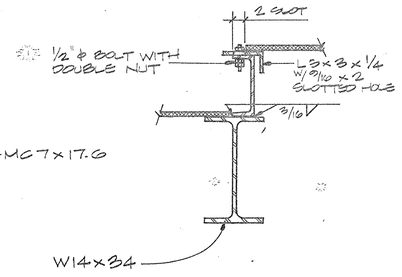

SECTION 10
SEE DETAIL 'B', DRAWING 3.8H-3.

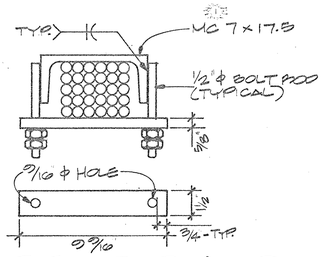

SECTION 11
SEE DETAIL 'B', DRAWING 3.8H-3.

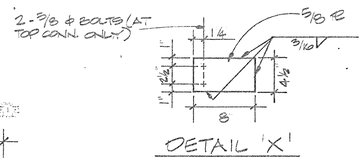

DETAIL 'X'

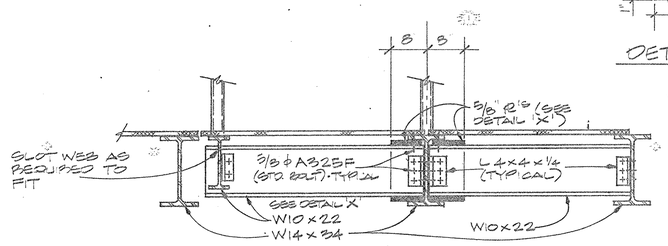

SECTION 12
SEE DETAIL 'B', DRAWING 3.8H-3

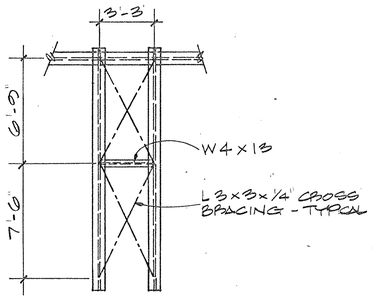

SECTION 14
SEE SECTION 2, DWG 3.8H-3

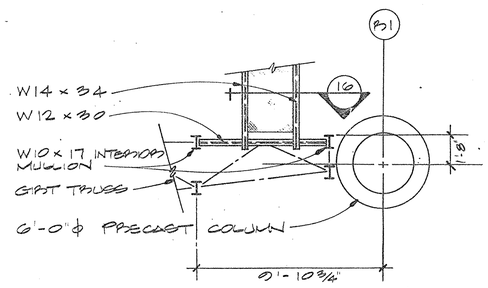

DETAIL E
SEE DRAWING 3.8H-1

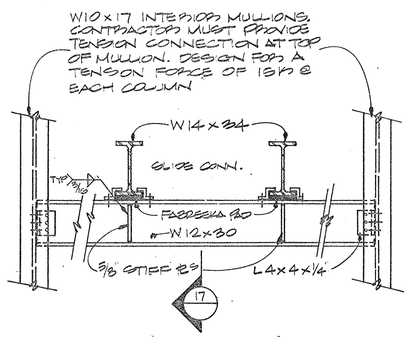

SECTION 16
SEE DETAIL 'E', THIS DRAWING.

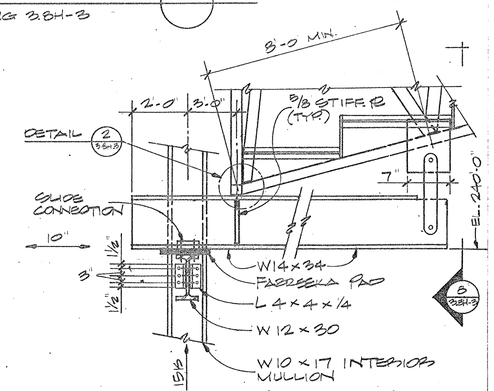

SECTION 17
SEE SECTION '16' THIS DRAWING.

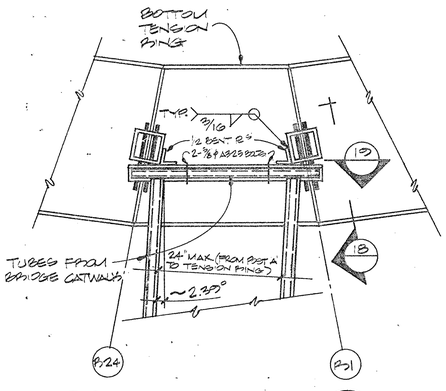

DETAIL F
SEE DRAWING 3.8H-1

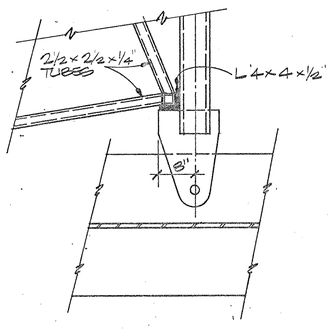

SECTION 18
SEE DETAIL 'F', THIS DRAWING.

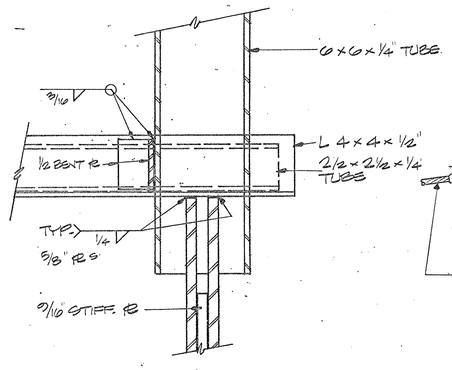

SECTION 19
SEE DETAIL 'F', THIS DRAWING.

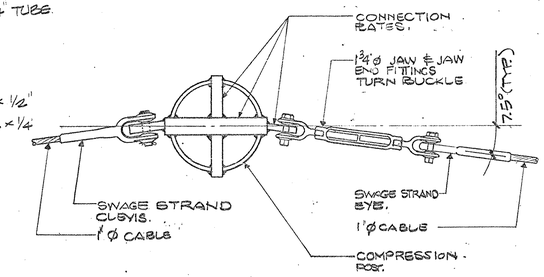

SECTION 20
SEE DWG. 3.8S-4 FOR SIZES AND DETAILS.

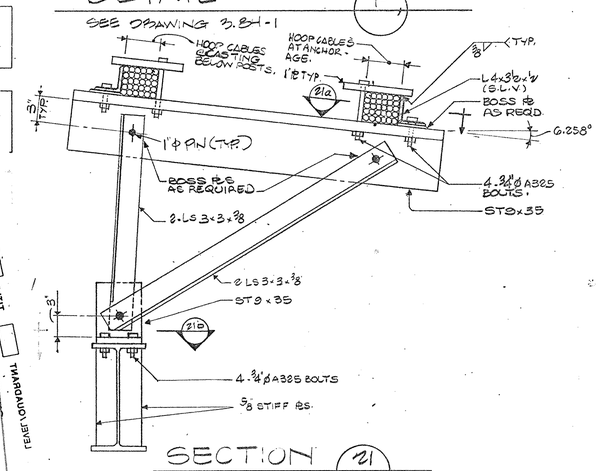

SECTION 21
SEE DETAIL 'B' DWG. 3.8H-3

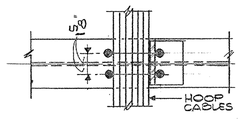

SECTION 21a
SEE SECT. 21 THIS DWG.

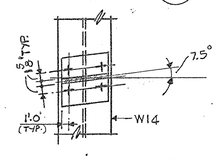

SECTION 21b
SEE SECT. 21 THIS DWG.

NOTES - LEGEND

KKBNA/PC
STRUCTURAL, MECHANICAL, ELECTRICAL, PLUMBING
116 Fifth Avenue
New York, New York 10011
212-242-0900

POST, BUCKLEY, SCHUH & JERNIGAN, INC.
CIVIL & STRUCTURAL ENGINEERS AND PLANNERS
200 First Avenue South
St. Petersburg, Florida 33701
813-446-7275

THE JONER-ROSE GROUP
CONSULTANTS IN ACOUSTICS
1125 Central Expy. North
Allen, Texas 75013
214-382-7600

HELLMUTH, OBATA & KASSABAUM, INC.
ARCHITECTURE, INTERIORS, PLANNING, GRAPHICS, ENGINEERING
323 WEST EIGHTH STREET
SUITE 200
KANSAS CITY, MISSOURI 64105
816-221-1576

101 hok SPORTS

D C A B (R1)
KEY PLAN

THE STADIUM
One Booker Creek Place
St. Petersburg, Pinellas County, Florida

RECEIVED
JAN 13 1988
GEIGER/KKBNA

Approval Dates	Owner	Owner Rep.	Contractor	Architect Consult
DD	11/21/86	11/21/86	11/21/86	11/21/86
CD	9-28-87	9-28-87	9-28-87	9-28-87

Project No. 4008-001/9541.01

Drawn	Reviewed	Issued
		6-22-87

Revisions		
No.	Description	Da'e
1		
2		
3		
4		
5		
6		
7		
8		
9		
10		
11		
12		
13		
14		
15		
16		
17		
18		

Category	Sub-Cat.	Sheet
		3.8H-4

BRIDGE CATWALK & CONNECTION AT TENSION & COMPRESSION RINGS

STRUCTURAL ACOUSTICAL PLUMBING ELECTRICAL MECHANICAL OTHER NOTE TITLE TAMARAUD/JERI

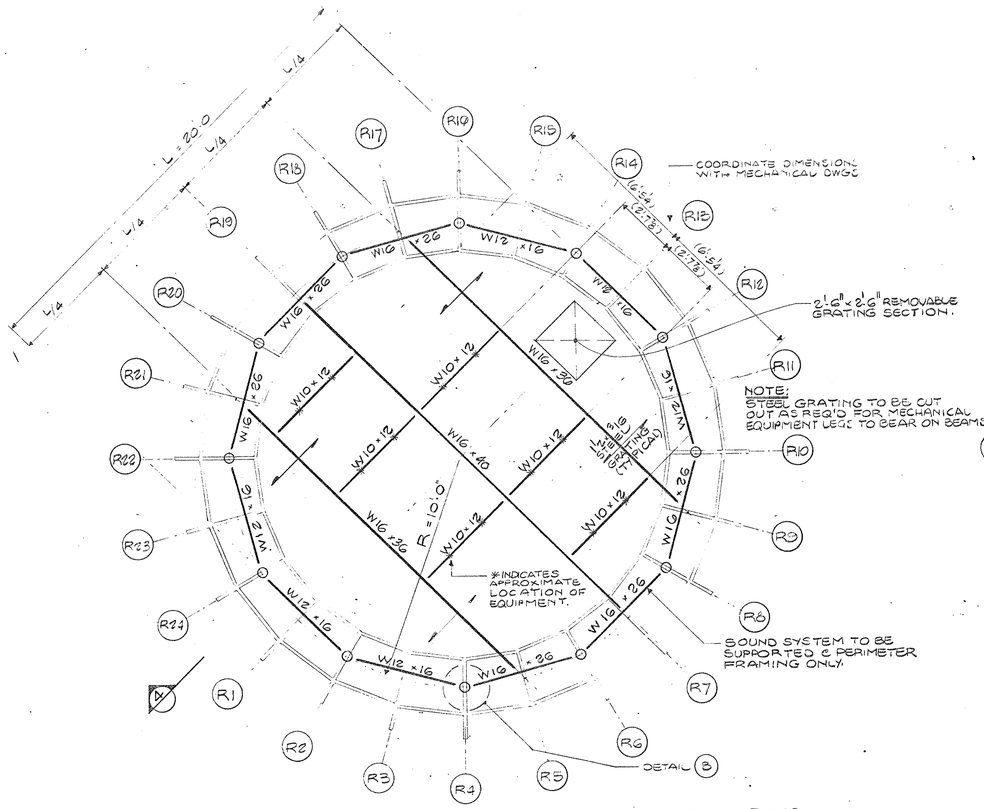

MECHANICAL PLATFORM FRAMING PLAN AT LOWER TENSION RING

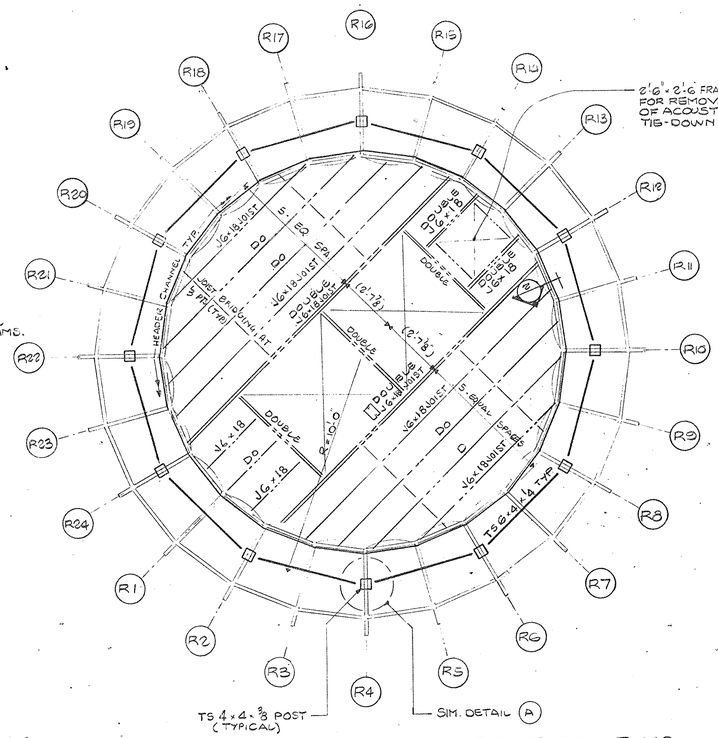
HEADER CHANNEL
W6x18 JOIST
DOUBLE W6x18 JOIST
W6x18 JOIST
DOUBLE W6x18 JOIST
DOUBLE W6x18 JOIST
W6x18 JOIST
DOUBLE W6x18 JOIST
W6x18 JOIST
DOUBLE W6x18 JOIST
W6x18 JOIST
W6x18 JOIST

Pin	Issue ID	Description	Location Detail	Status	Company	Type	Date Created	Due Date

CATWALK (9 issues)

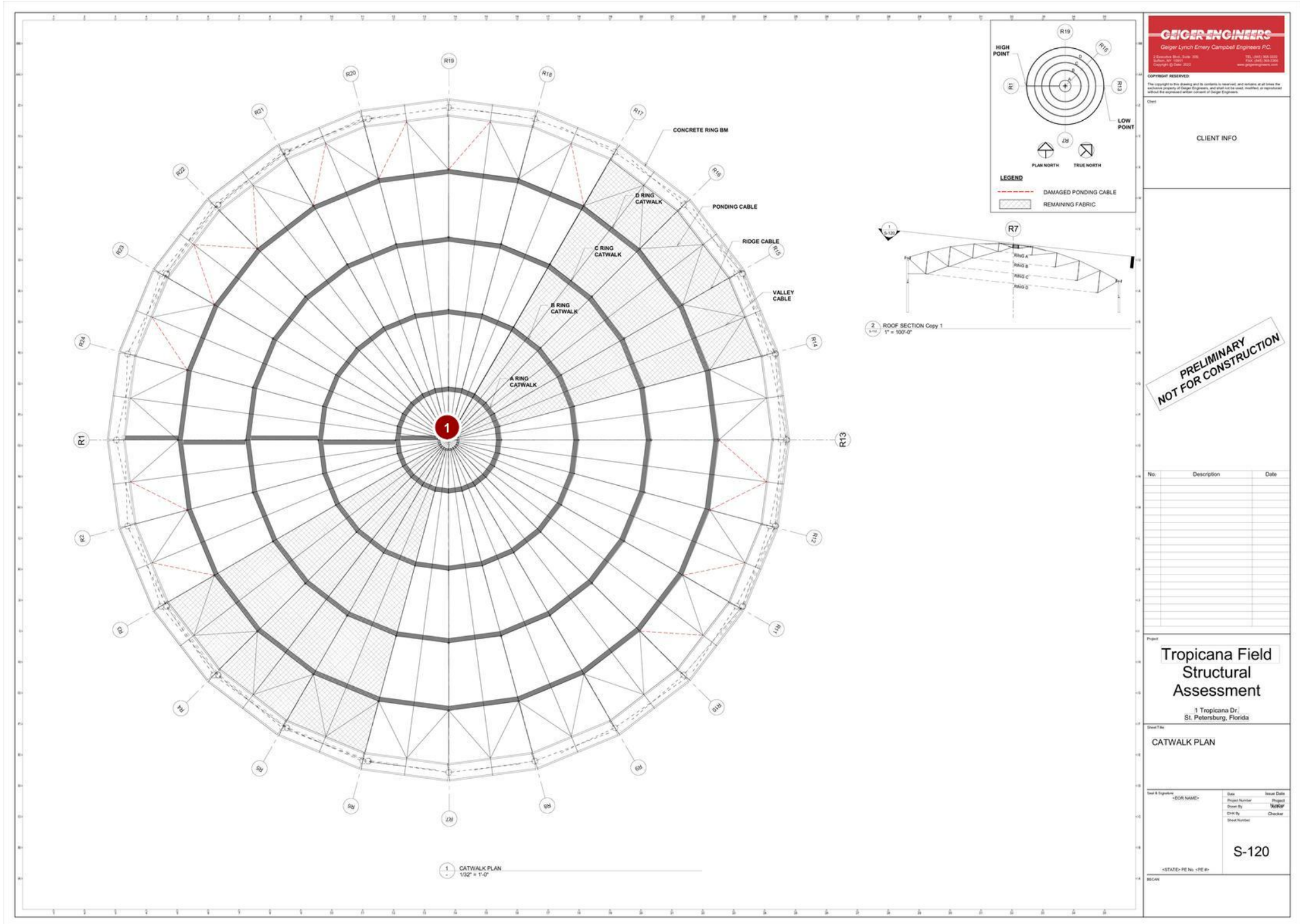

S-120 - CATWALK PLAN.pdf

Draft | Open | Work Completed | Ready to Inspect | Closed | Not Approved | In Dispute

Pin	Issue ID	Description	Location Detail	Status	Company	Type	Date Created	Due Date
1	000082	Sheet metal cover plate missing for ridge cable clamping		Open	<not set>	Issue - Fabric	25 Oct 2024	

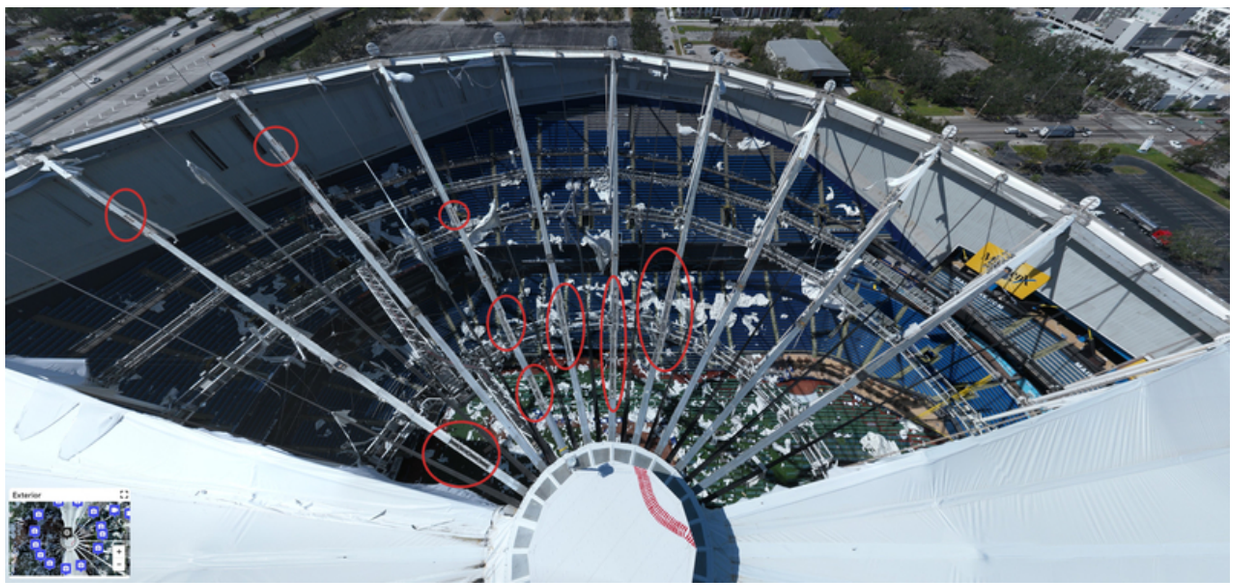

2024-10-25 15:19:19

End of 000082 images

Pin	Issue ID	Description	Location Detail	Status	Company	Type	Date Created	Due Date

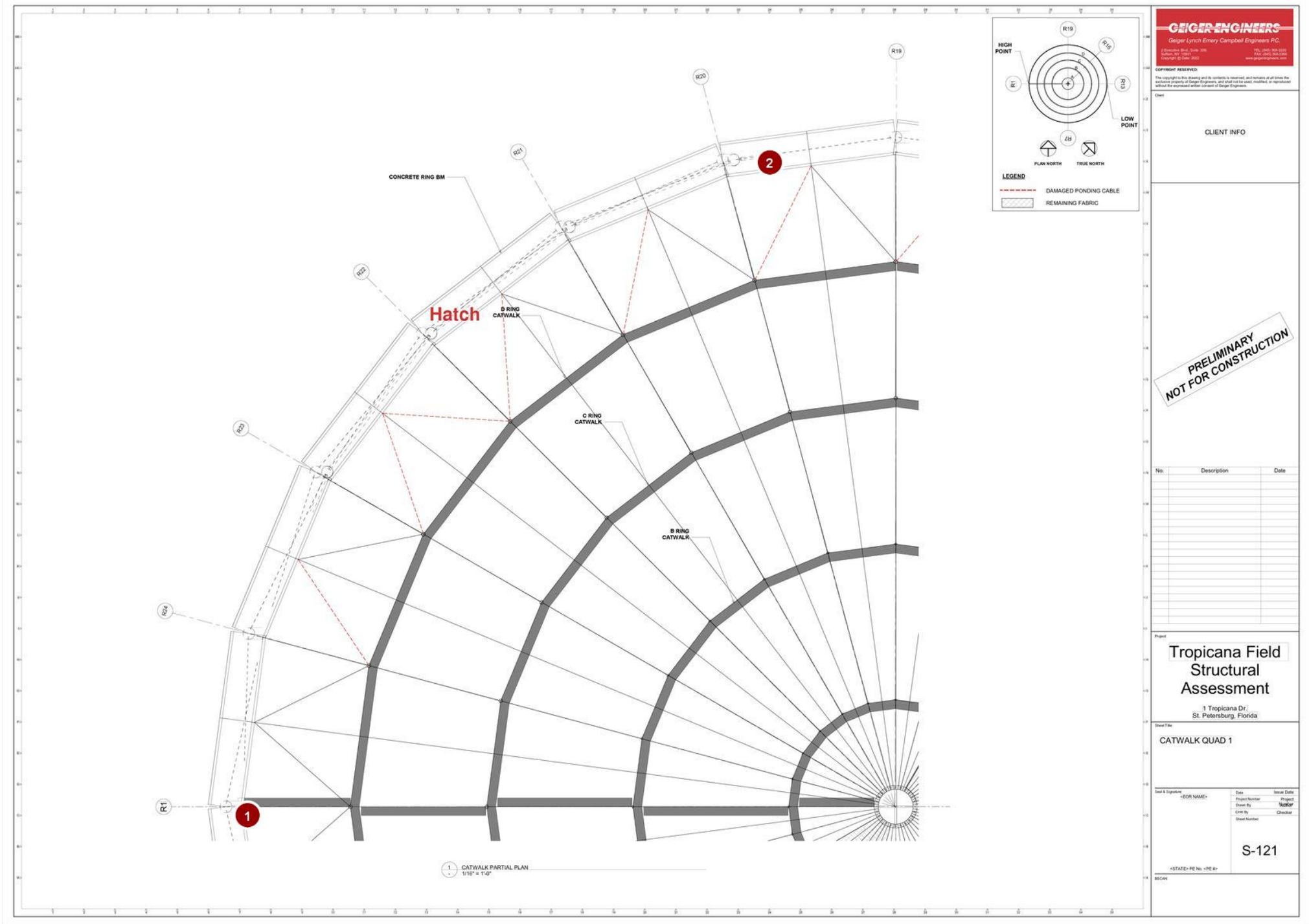

S-121 - CATWALK QUAD 1.pdf -

Draft	Open	Work Completed	Ready to Inspect	Closed	Not Approved	In Dispute

1	000048	Ring beam to fabric clamp failure.	Open	<not set>	Issue - Fabric	22 Oct 2024

Pin	Issue ID	Description	Location Detail	Status	Company	Type	Date Created	Due Date

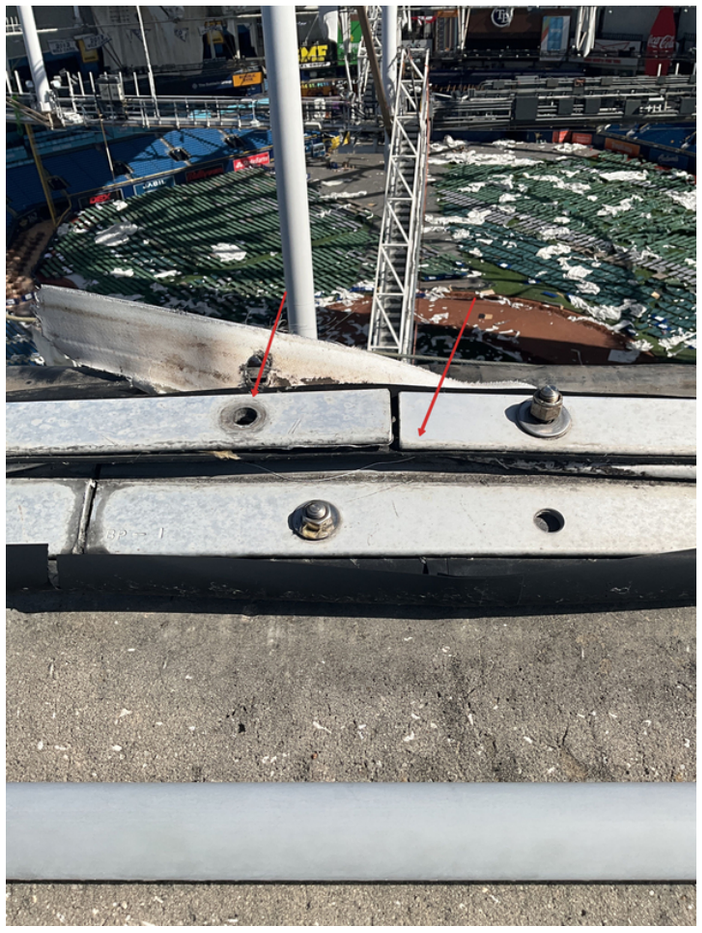

2024-10-22 11:41:34

End of 000048 images

Pin	Issue ID	Description	Location Detail	Status	Company	Type	Date Created	Due Date
2	000071	Fabric clamp failure on concrete ring.		Open	<not set>	Issue - Fabric	23 Oct 2024	



2024-10-23 09:30:56

End of 000071 images

Pin	Issue ID	Description	Location Detail	Status	Company	Type	Date Created	Due Date

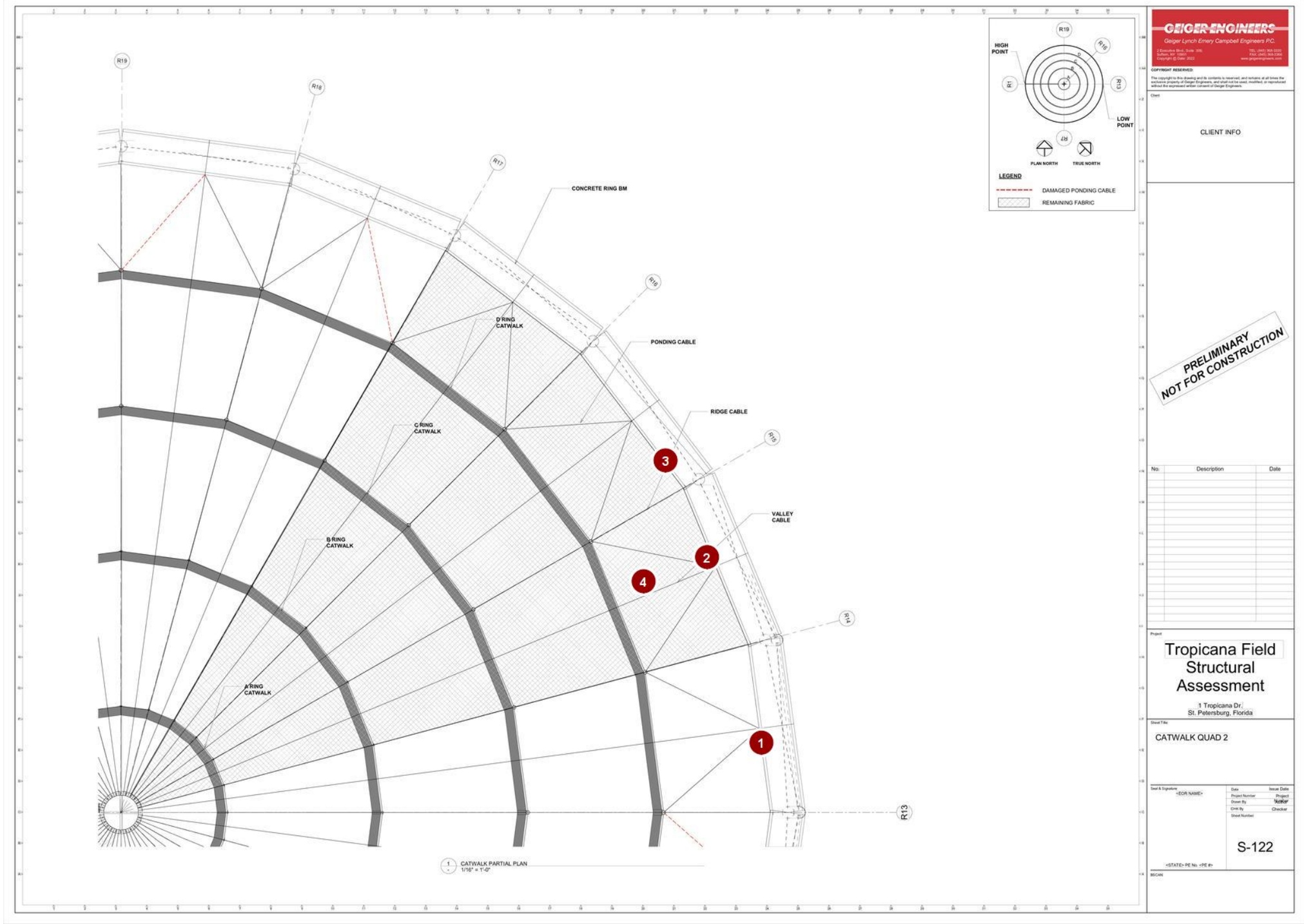

S-122 - CATWALK QUAD 2.pdf -

Draft	Open	Work Completed	Ready to Inspect	Closed	Not Approved	In Dispute

1	000034	Ring beam to fabric clamp failure.		Open	<not set>	Issue - Fabric	22 Oct 2024

Issues - Fabric

Pin	Issue ID	Description	Location Detail	Status	Company	Type	Date Created	Due Date

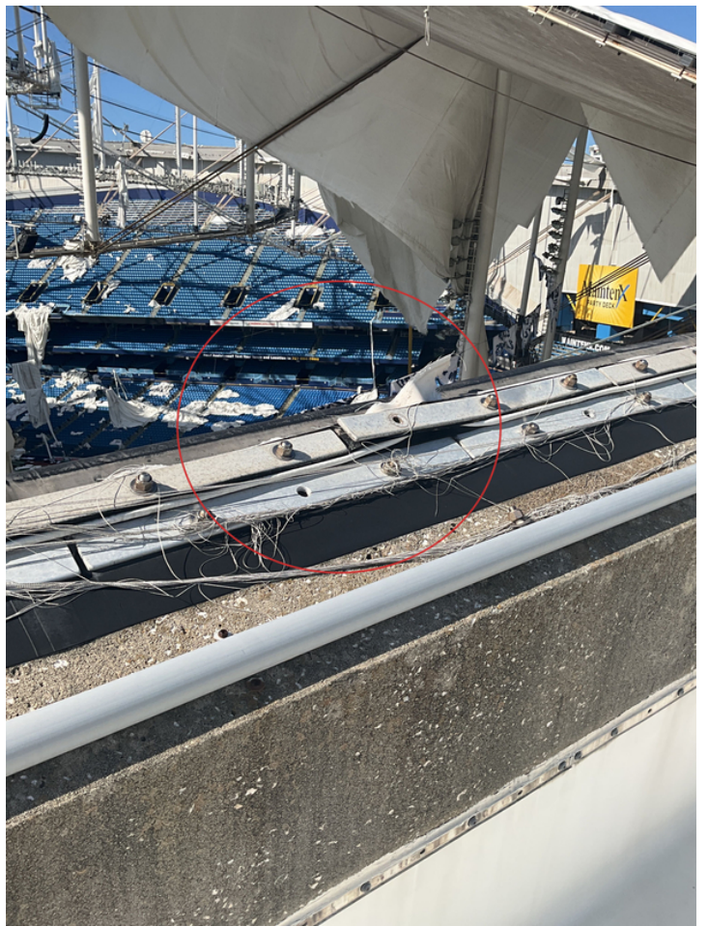

2024-10-22 11:09:07

End of 000034 images

Pin	Issue ID	Description	Location Detail	Status	Company	Type	Date Created	Due Date
2	000036	Fabric tear in remaining panel. Tear should be patched to prevent propagation. This tear was likely caused by the ponding cables below.		Open	<not set>	Issue - Fabric	22 Oct 2024	



2024-10-22 11:12:34



2024-10-22 11:12:13

End of 000036 images

Issues - Fabric

Pin	Issue ID	Description	Location Detail	Status	Company	Type	Date Created	Due Date
3	000074	Fabric tear in remaining panel.		Open	<not set>	Issue - Fabric	23 Oct 2024	

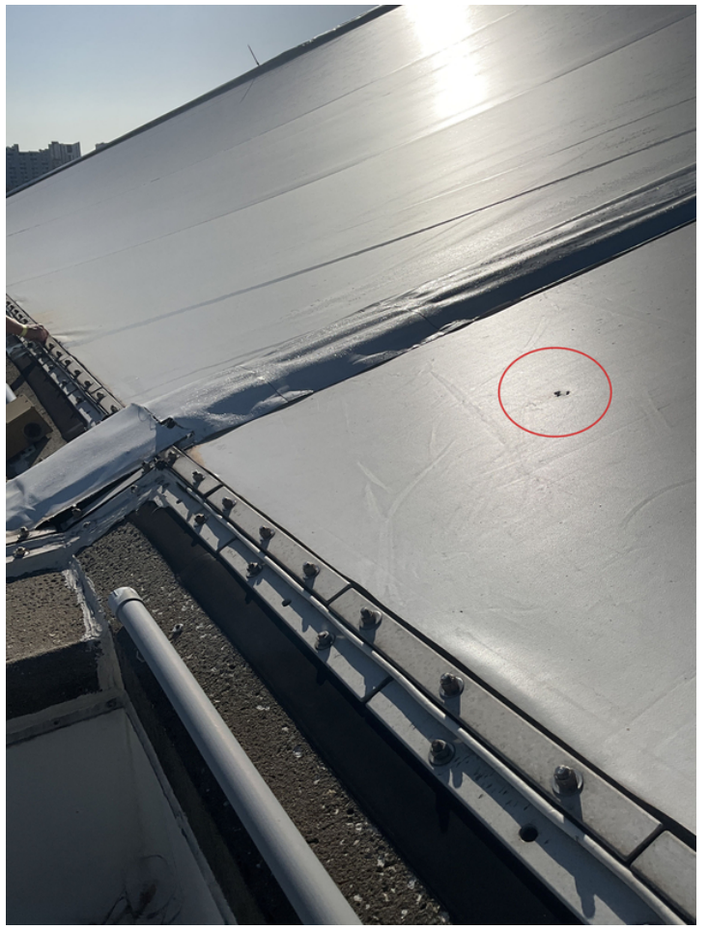

2024-10-23 09:56:28



2024-10-23 09:56:26

End of 000074 images

Issues - Fabric

Pin	Issue ID	Description	Location Detail	Status	Company	Type	Date Created	Due Date
4	000075	Valley cable cover damaged in remaining panels.		Open	<not set>	Issue - Fabric	23 Oct 2024	



2024-10-23 10:01:04

End of 000075 images

Pin	Issue ID	Description	Location Detail	Status	Company	Type	Date Created	Due Date

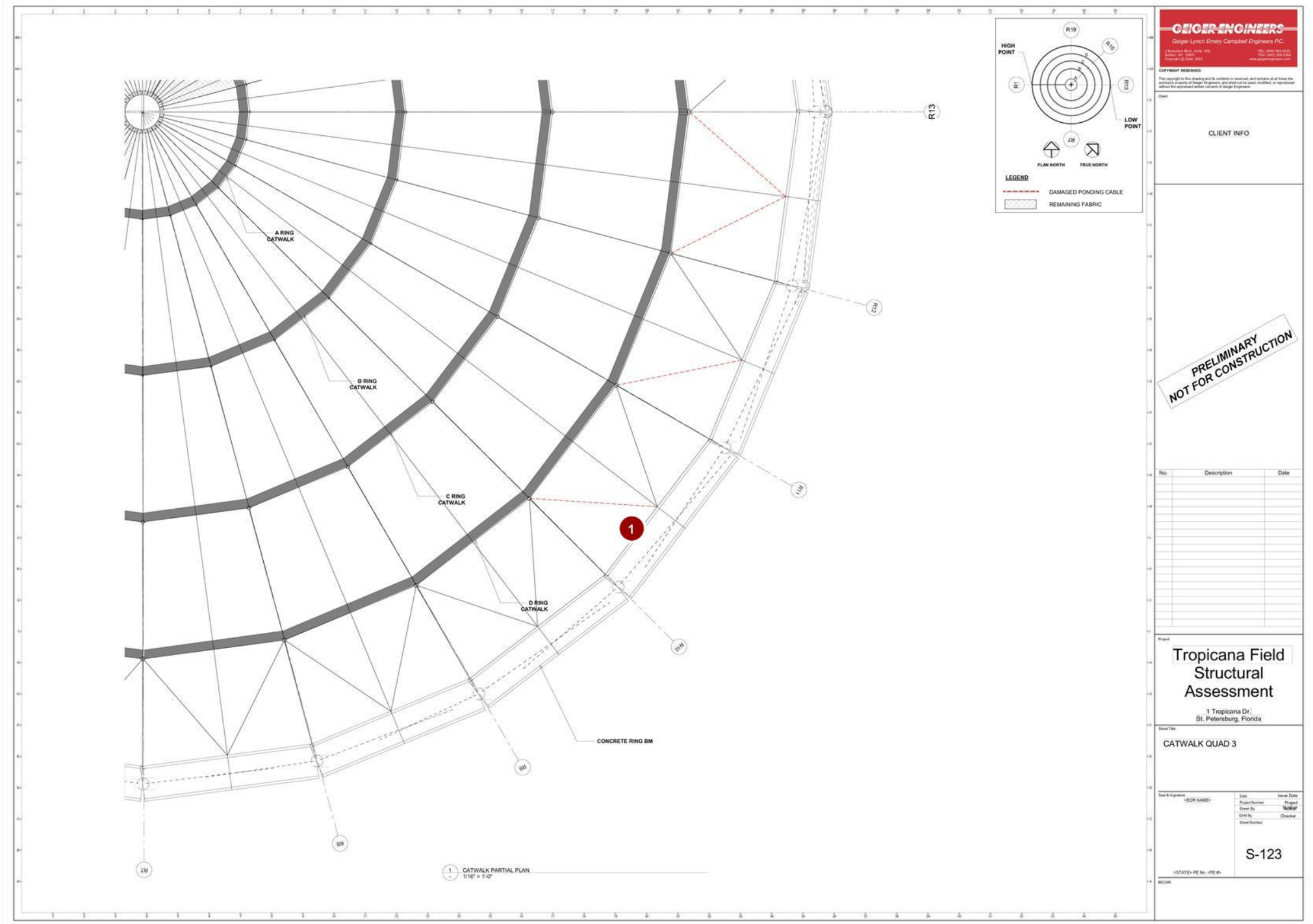

S-123 - CATWALK QUAD 3.pdf

Draft	Open	Work Completed	Ready to Inspect	Closed	Not Approved	In Dispute

1	000027	Ring beam to fabric clamp failure.		Open	<not set>	Issue - Fabric	22 Oct 2024

Pin	Issue ID	Description	Location Detail	Status	Company	Type	Date Created	Due Date



2024-10-22 10:55:12



2024-10-22 10:55:08

End of 000027 images

Issues without Pushpins

Pin	Issue ID	Description	Location Detail	Status	Company	Type	Date Created	Due Date
Issues without Pushpins								
	000084	Ridge clamp missing bottom plate. Photo was provided by rope access work. Location unknown.		Open	<not set>	Issue - Fabric	28 Oct 2024	

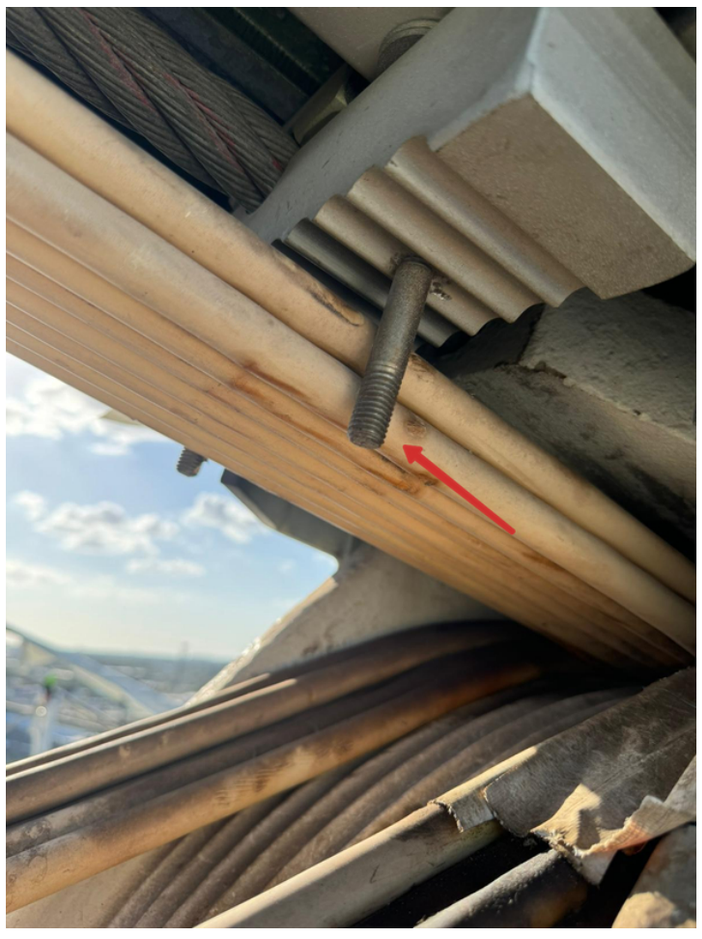

2024-10-28 18:20:29

End of 000084 images

Pin	Issue ID	Description	Location Detail	Status	Company	Type	Date Created	Due Date

CATWALK (16 issues)

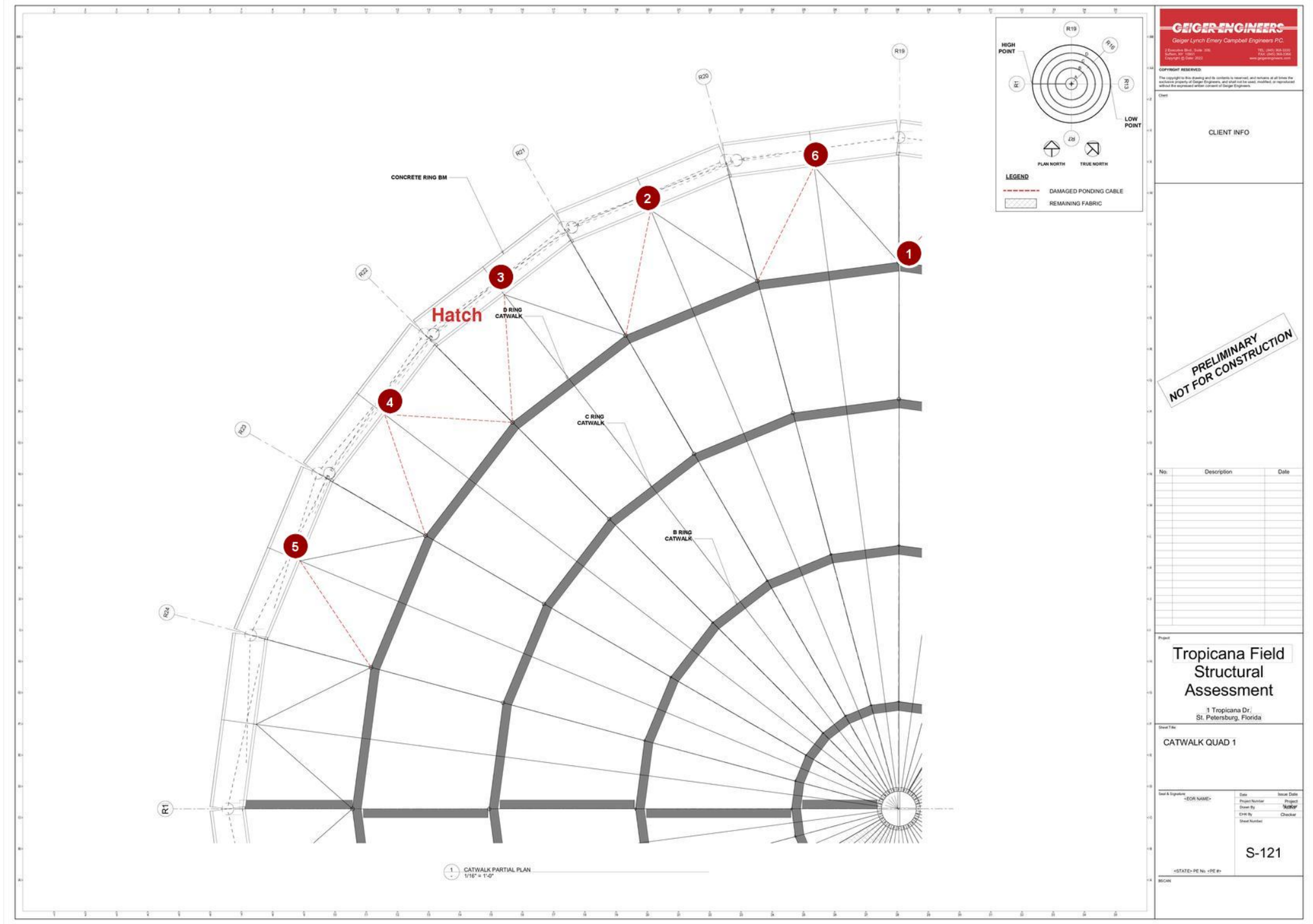

S-121 - CATWALK QUAD 1.pdf -

Draft | Open | Work Completed | Ready to Inspect | Closed | Not Approved | In Dispute

Issues - Cables

Pin	Issue ID	Description	Location Detail	Status	Company	Type	Date Created	Due Date
1	000041	Ponding cable failure.		Open	<not set>	Issue - Cables	22 Oct 2024	



2024-10-22 11:30:52

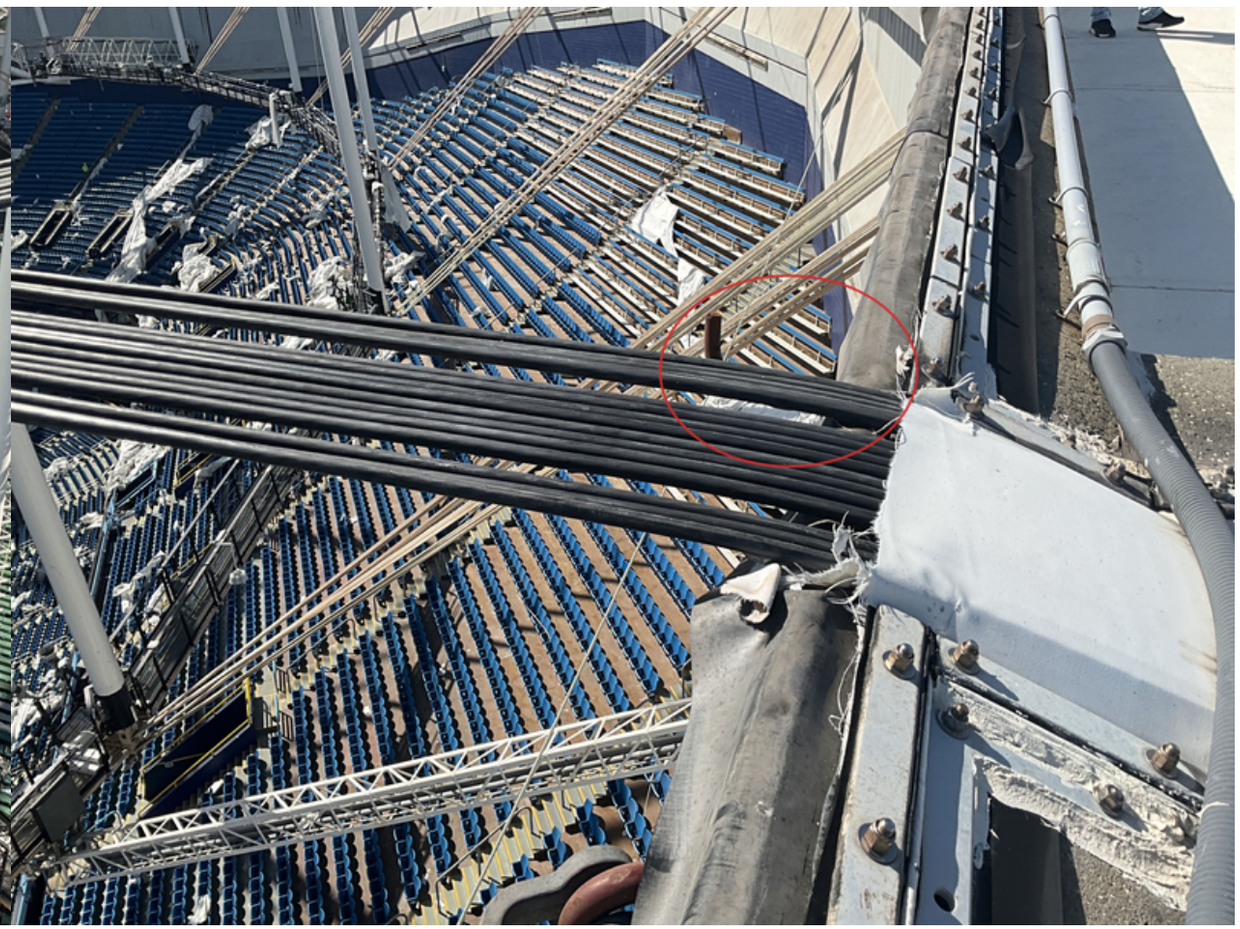

2024-10-22 11:30:40

End of 000041 images

Issues - Cables

Pin	Issue ID	Description	Location Detail	Status	Company	Type	Date Created	Due Date
2	000042	Ponding cable failure.		Open	<not set>	Issue - Cables	22 Oct 2024	

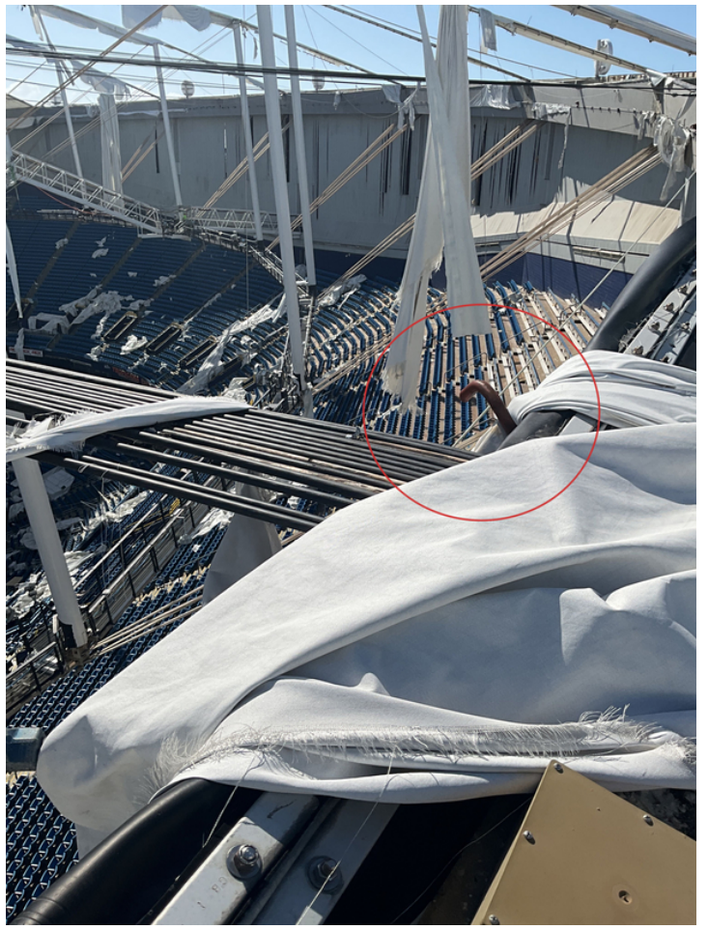

2024-10-22 11:32:31

End of 000042 images

Pin	Issue ID	Description	Location Detail	Status	Company	Type	Date Created	Due Date
3	000043	Ponding cable failure		Open	<not set>	Issue - Cables	22 Oct 2024	



2024-10-22 11:34:04

End of 000043 images

Issues - Cables

Pin	Issue ID	Description	Location Detail	Status	Company	Type	Date Created	Due Date
4	000045	Ponding cable failure.		Open	<not set>	Issue - Cables	22 Oct 2024	



2024-10-22 11:36:21

End of 000045 images

Issues - Cables

Pin	Issue ID	Description	Location Detail	Status	Company	Type	Date Created	Due Date
5	000046	Ponding cable failure.		Open	<not set>	Issue - Cables	22 Oct 2024	



2024-10-22 11:39:28

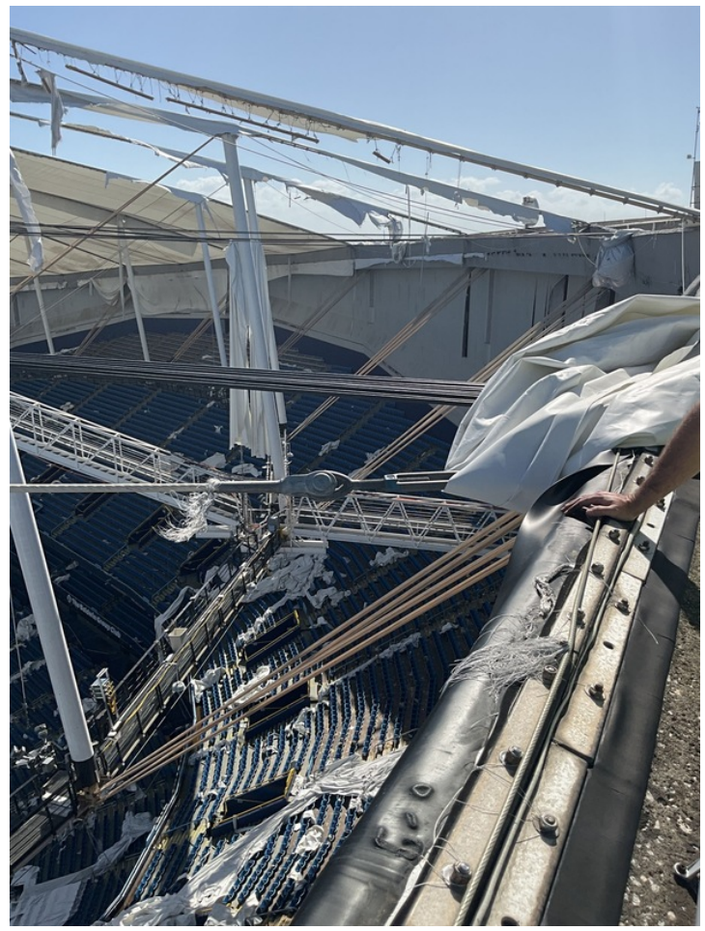

2024-10-22 11:38:28

Pin	Issue ID	Description	Location Detail	Status	Company	Type	Date Created	Due Date

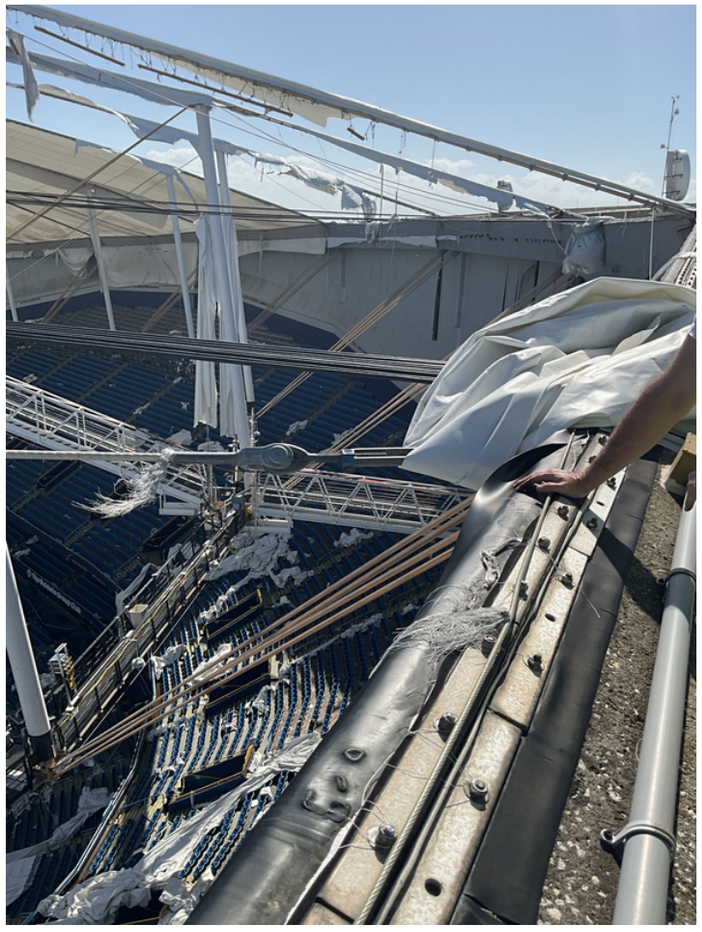

2024-10-22 11:38:25



2024-10-22 11:38:22 Failed ponding cables draped over in tact cable

End of 000046 images

Issues - Cables

Pin	Issue ID	Description	Location Detail	Status	Company	Type	Date Created	Due Date
6	000072	Ponding cable fail		Open	<not set>	Issue - Cables	23 Oct 2024	



2024-10-23 09:32:39

End of 000072 images

Pin	Issue ID	Description	Location Detail	Status	Company	Type	Date Created	Due Date

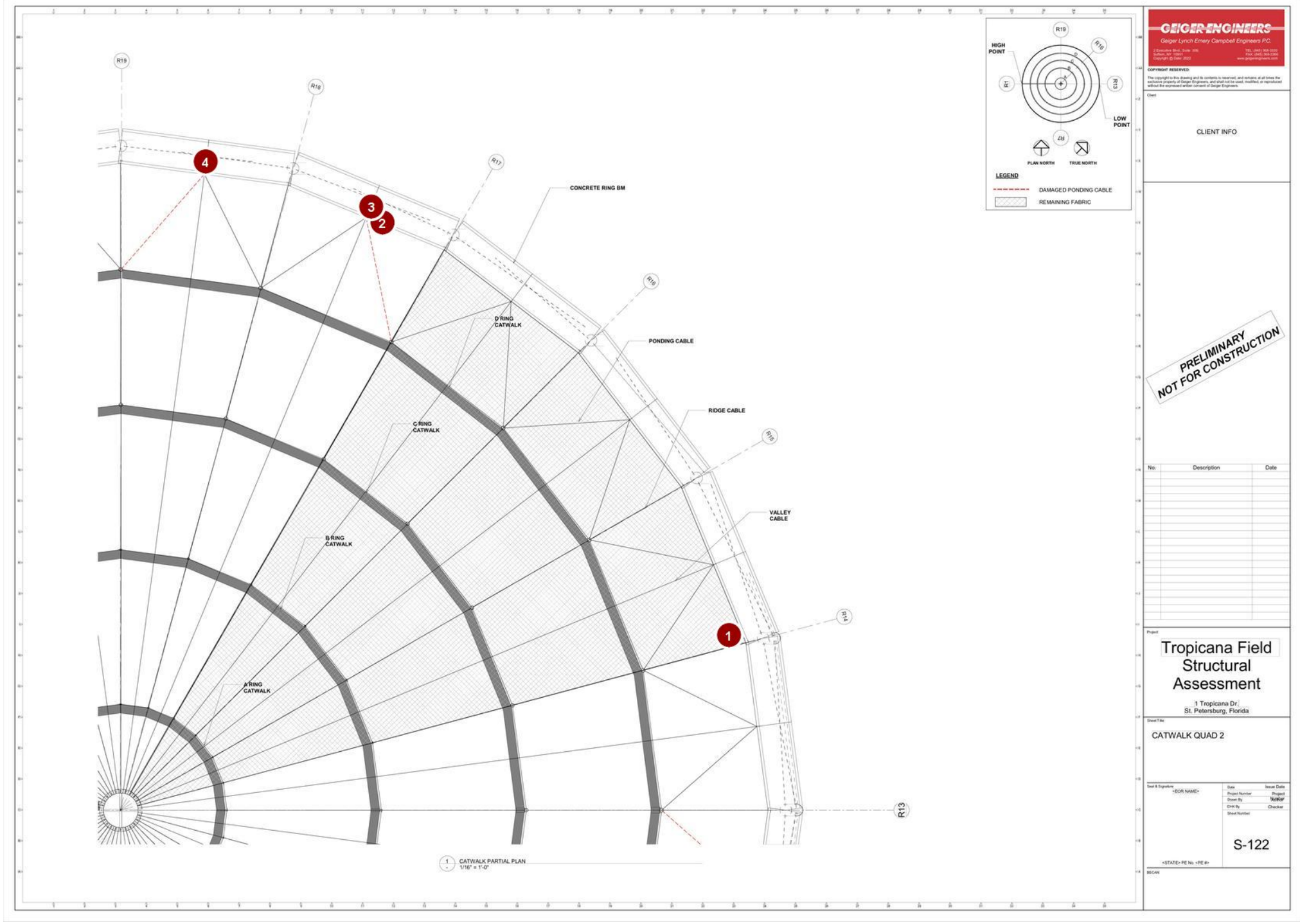

S-122 - CATWALK QUAD 2.pdf -

Draft	Open	Work Completed	Ready to Inspect	Closed	Not Approved	In Dispute

1	000035	Ridge Cable corrosion		Open	<not set>	Issue - Cables	22 Oct 2024

Pin	Issue ID	Description	Location Detail	Status	Company	Type	Date Created	Due Date



2024-10-22 11:10:33



2024-10-22 11:09:49

End of 000035 images

Pin	Issue ID	Description	Location Detail	Status	Company	Type	Date Created	Due Date
2	000037	Ponding cable failure.		Open	<not set>	Issue - Cables	22 Oct 2024	



2024-10-22 11:22:40

End of 000037 images

Issues - Cables

Pin	Issue ID	Description	Location Detail	Status	Company	Type	Date Created	Due Date
3	000038	Ponding cable failure.		Open	<not set>	Issue - Cables	22 Oct 2024	

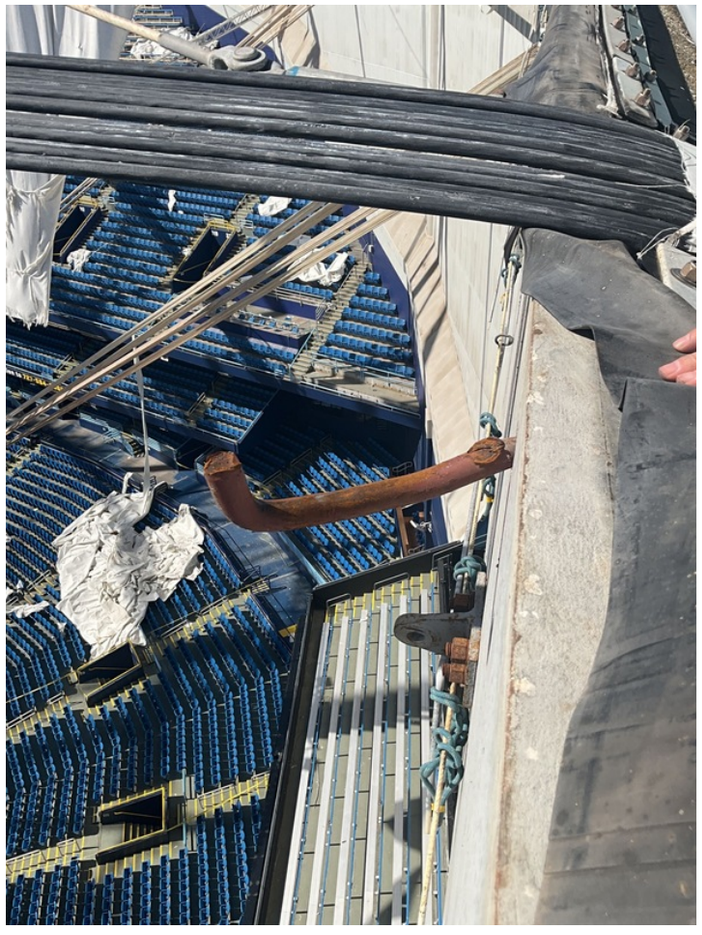

2024-10-22 11:24:04



2024-10-22 11:23:22

Pin	Issue ID	Description	Location Detail	Status	Company	Type	Date Created	Due Date

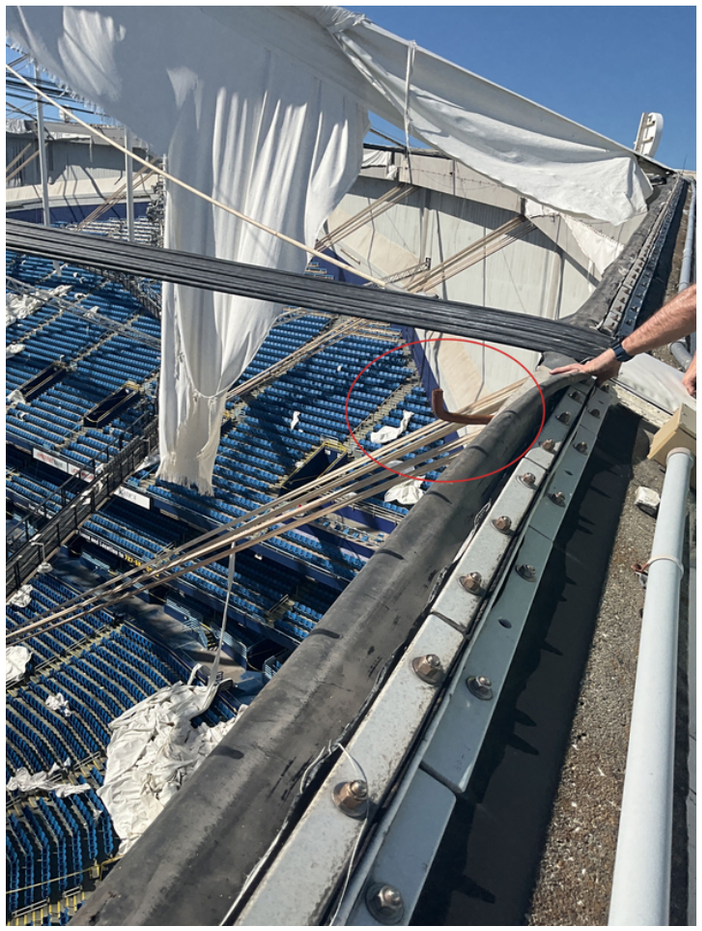

2024-10-22 11:23:14

End of 000038 images

Issues - Cables

Pin	Issue ID	Description	Location Detail	Status	Company	Type	Date Created	Due Date
4	000039	Ponding cable failure.		Open	<not set>	Issue - Cables	22 Oct 2024	



2024-10-22 11:28:33



2024-10-22 11:26:47

End of 000039 images

Pin	Issue ID	Description	Location Detail	Status	Company	Type	Date Created	Due Date

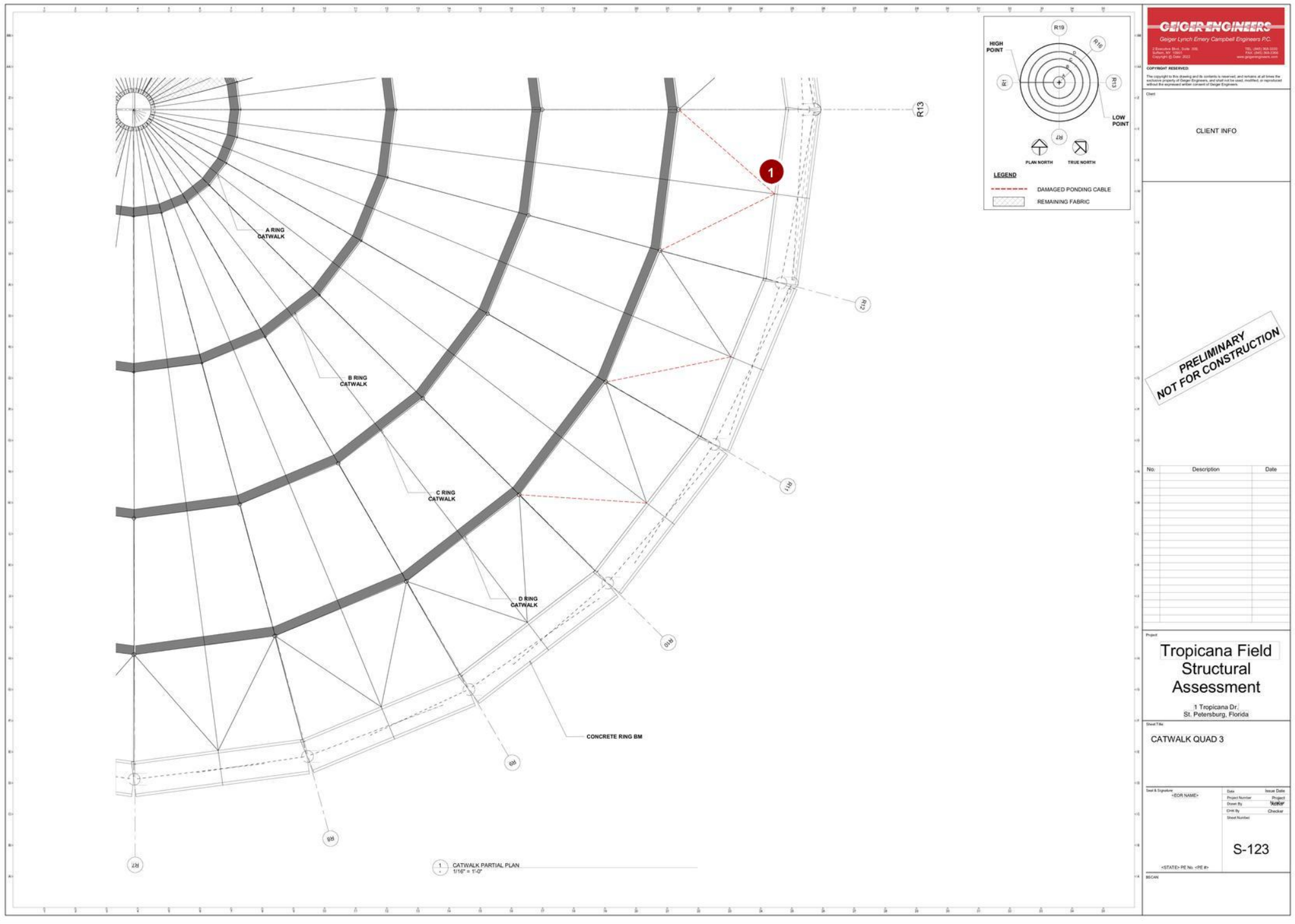

S-123 - CATWALK QUAD 3.pdf

Draft	Open	Work Completed	Ready to Inspect	Closed	Not Approved	In Dispute

1	000032	Ponding cable anchor fail		Open	<not set>	Issue - Cables	22 Oct 2024

Issues - Cables

Pin	Issue ID	Description	Location Detail	Status	Company	Type	Date Created	Due Date

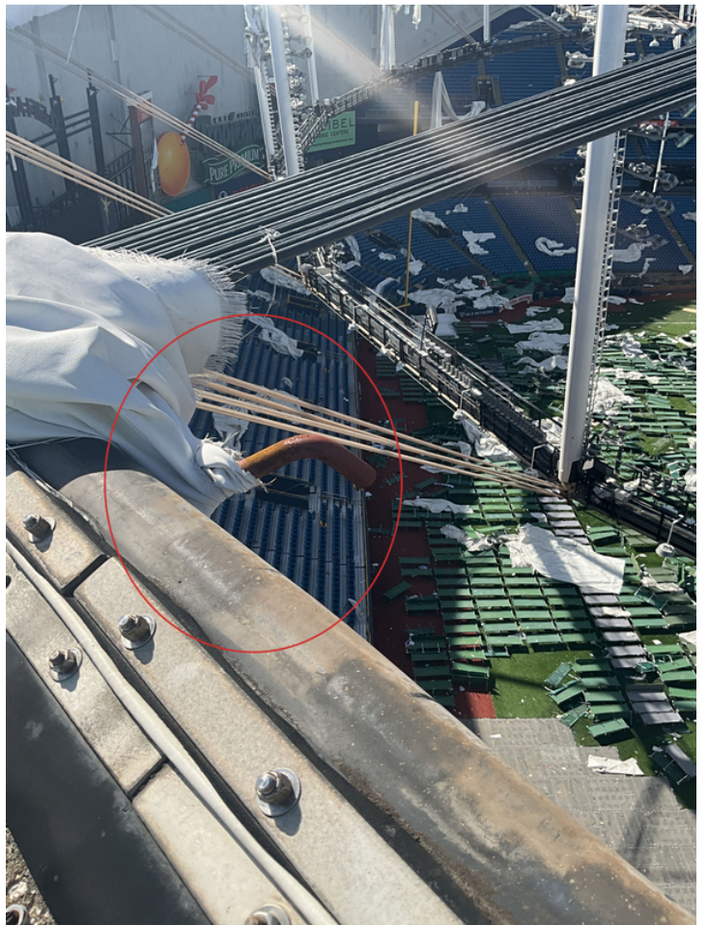

2024-10-22 11:03:32



2024-10-22 11:02:58

Issues - Cables

Pin	Issue ID	Description	Location Detail	Status	Company	Type	Date Created	Due Date

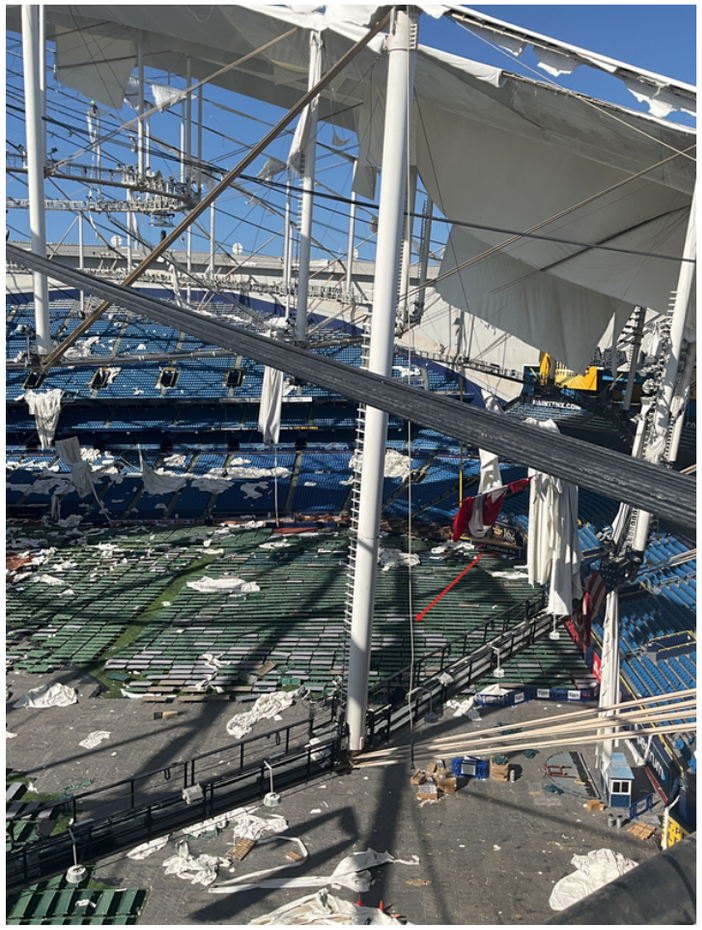

2024-10-22 11:02:55



2024-10-22 11:02:51

Pin	Issue ID	Description	Location Detail	Status	Company	Type	Date Created	Due Date



2024-10-22 11:02:43

End of 000032 images

Pin	Issue ID	Description	Location Detail	Status	Company	Type	Date Created	Due Date

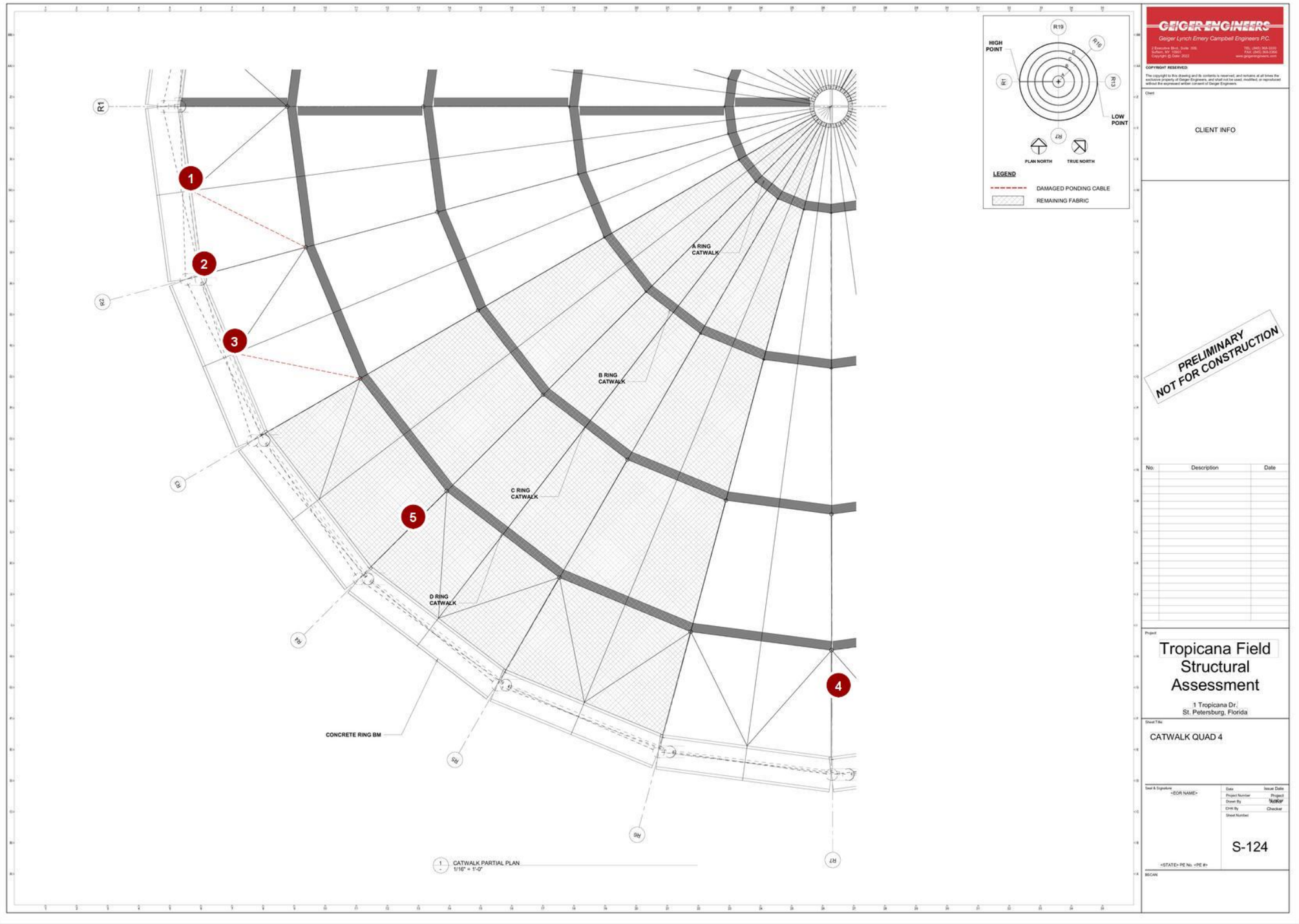

S-124 - CATWALK QUAD 4.pdf -

Draft	Open	Work Completed	Ready to Inspect	Closed	Not Approved	In Dispute

1	000049	Ponding cable fail	Open	<not set>	Issue - Cables	22 Oct 2024

Pin	Issue ID	Description	Location Detail	Status	Company	Type	Date Created	Due Date



2024-10-22 11:42:13

End of 000049 images

Issues - Cables

Pin	Issue ID	Description	Location Detail	Status	Company	Type	Date Created	Due Date
2	000050	Ridge jacket fail		Open	<not set>	Issue - Cables	22 Oct 2024	



2024-10-23 09:02:57

End of 000050 images

Issues - Cables

Pin	Issue ID	Description	Location Detail	Status	Company	Type	Date Created	Due Date
3	000051	Ponding cable failure.		Open	<not set>	Issue - Cables	22 Oct 2024	



2024-10-22 11:44:58

End of 000051 images

Pin	Issue ID	Description	Location Detail	Status	Company	Type	Date Created	Due Date
4	000068	Sleeve of diagonal cable has become unsheathed. Coating needs to be replaced or cable will corrode.		Open	<not set>	Issue - Cables	22 Oct 2024	



2024-10-22 15:33:43

End of 000068 images

Pin	Issue ID	Description	Location Detail	Status	Company	Type	Date Created	Due Date
5	000078	Diagonal cable jacket failure. Conditions appears to have existing pre-hurricane.		Open	<not set>	Issue - Cables	23 Oct 2024	



2024-10-23 12:30:45

End of 000078 images

Pin	Issue ID	Description	Location Detail	Status	Company	Type	Date Created	Due Date

CATWALK (5 issues)

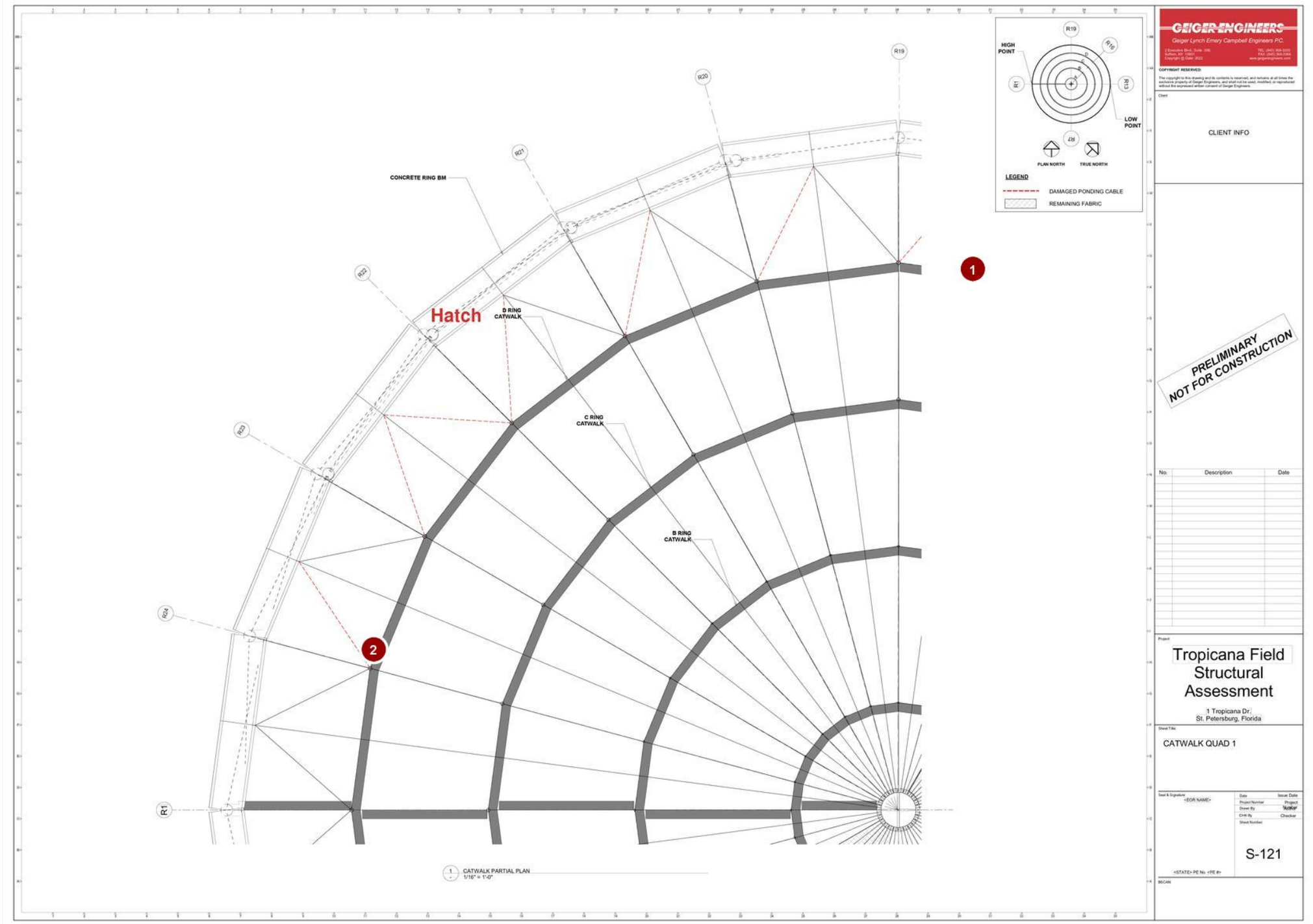

S-121 - CATWALK QUAD 1.pdf -

Draft | Open | Work Completed | Ready to Inspect | Closed | Not Approved | In Dispute

Pin	Issue ID	Description	Location Detail	Status	Company	Type	Date Created	Due Date
1	000059	Strut paint damage		Open	<not set>	Issue - Steel	22 Oct 2024	



2024-10-22 14:43:52

End of 000059 images

Pin	Issue ID	Description	Location Detail	Status	Company	Type	Date Created	Due Date
2	000070	Chipped paint		Open	<not set>	Issue - Steel	23 Oct 2024	

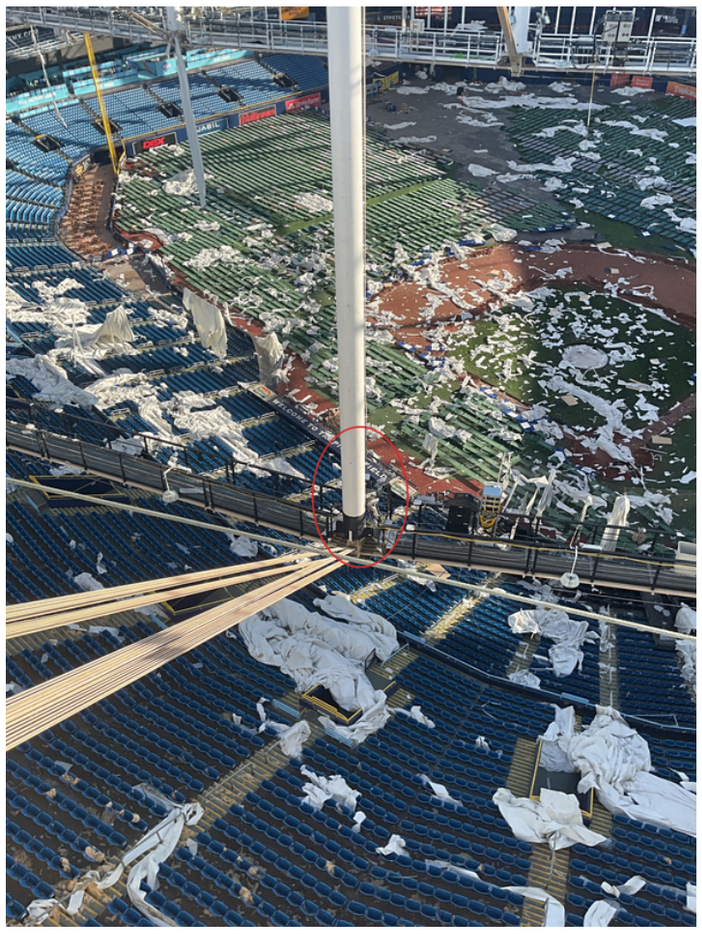

2024-10-23 09:14:59

End of 000070 images

Pin	Issue ID	Description	Location Detail	Status	Company	Type	Date Created	Due Date

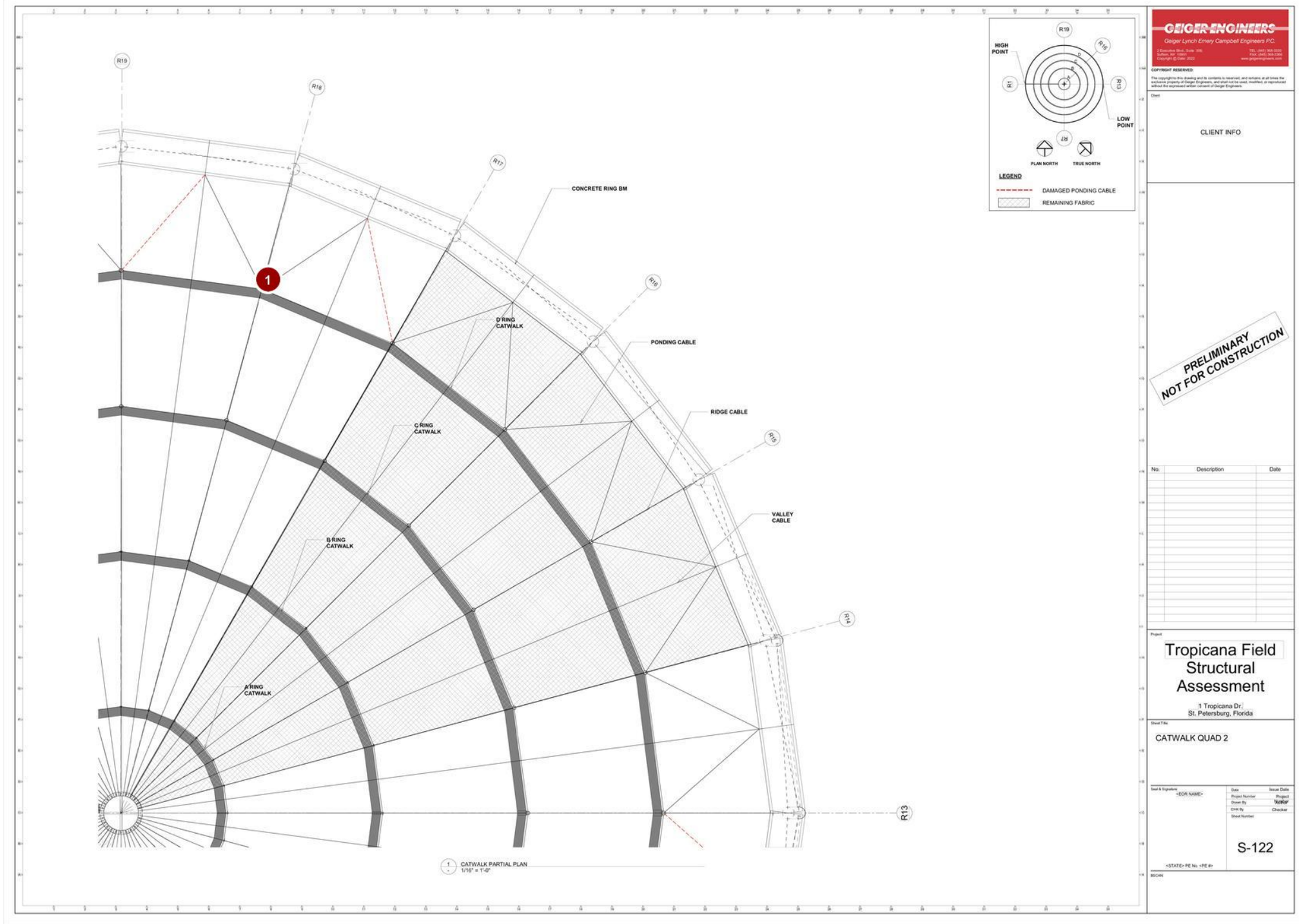

S-122 - CATWALK QUAD 2.pdf -

Draft	Open	Work Completed	Ready to Inspect	Closed	Not Approved	In Dispute

1	000073	Paint failure	Open	<not set>	Issue - Steel	23 Oct 2024

Pin	Issue ID	Description	Location Detail	Status	Company	Type	Date Created	Due Date

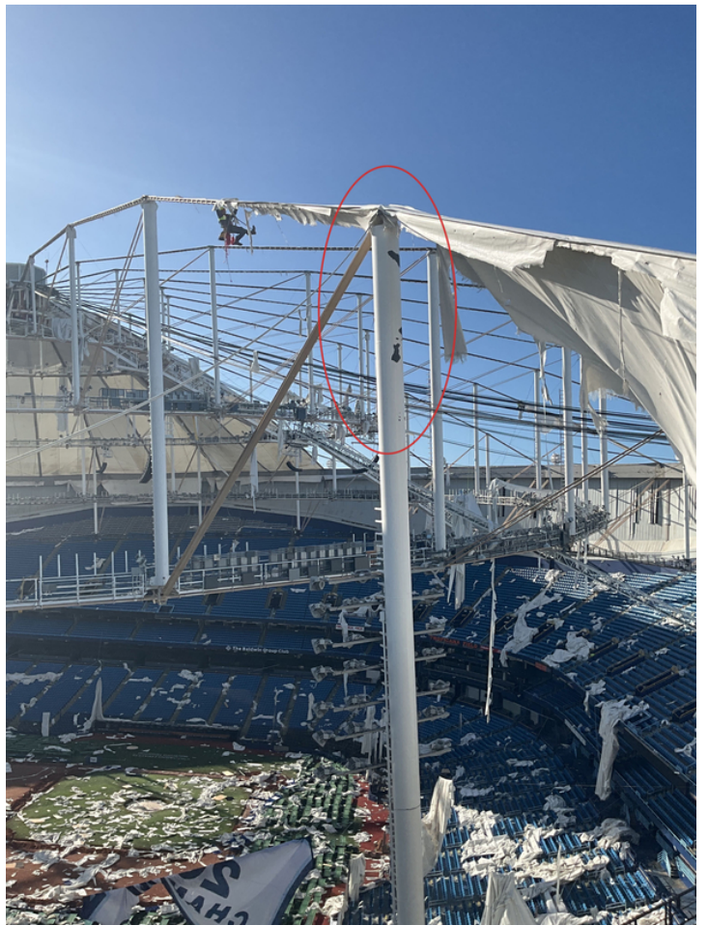

2024-10-23 09:39:59

End of 000073 images

Pin	Issue ID	Description	Location Detail	Status	Company	Type	Date Created	Due Date

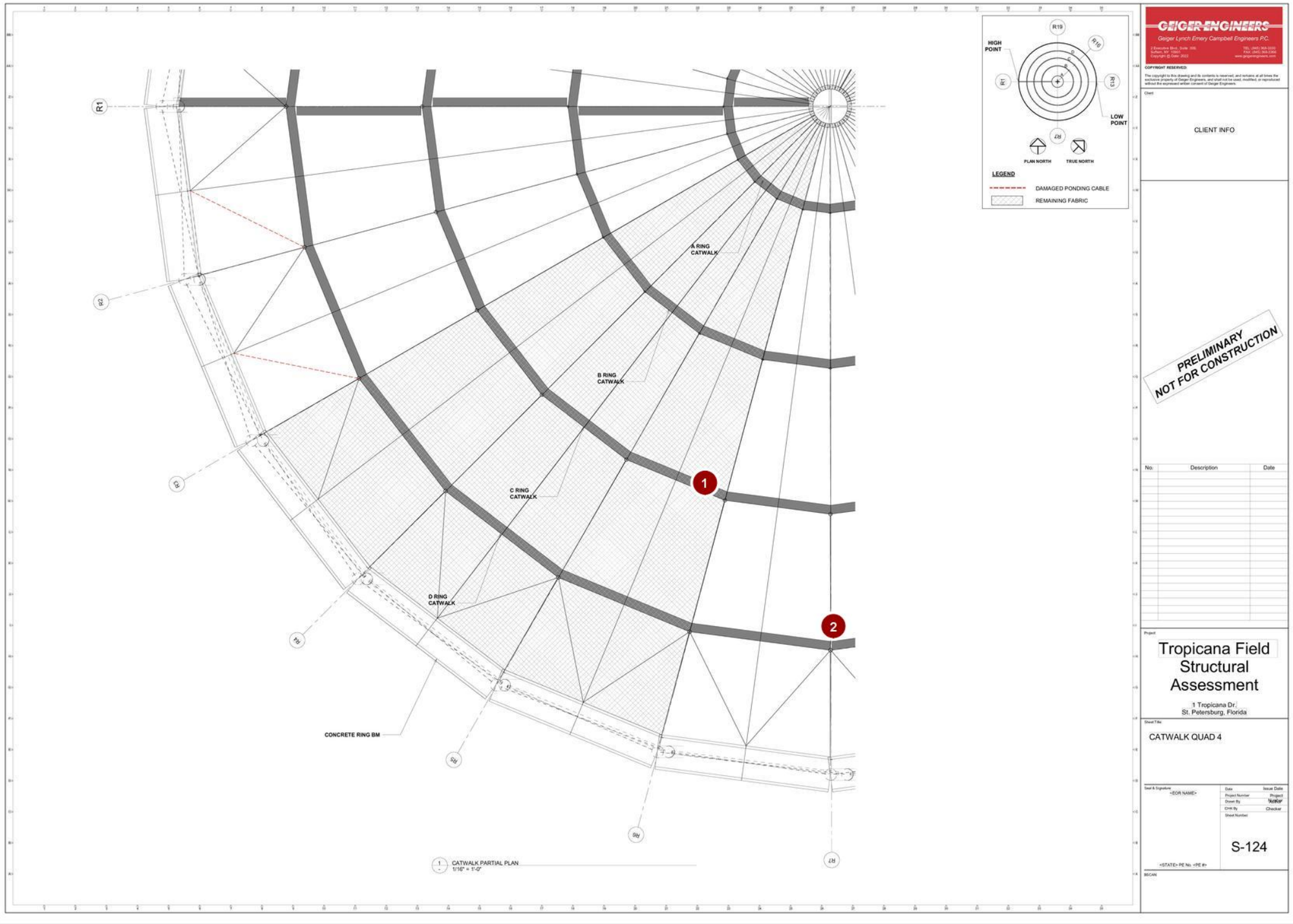

S-124 - CATWALK QUAD 4.pdf -

Draft · Open · Work Completed · Ready to Inspect · Closed · Not Approved · In Dispute

Pin	Issue ID	Description	Location Detail	Status	Company	Type	Date Created	Due Date
1	000079	Conduit truss hanging by single threaded rod. Note truss has safety cables in case rod fails.		Open	<not set>	Issue - Steel	23 Oct 2024	

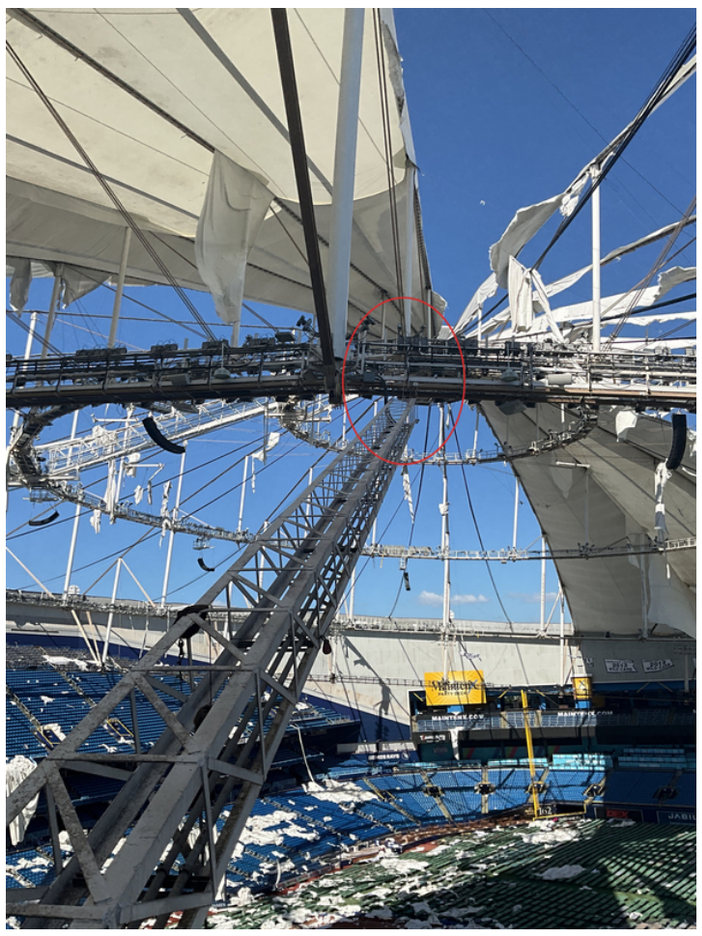

2024-10-23 12:37:43

End of 000079 images

Pin	Issue ID	Description	Location Detail	Status	Company	Type	Date Created	Due Date
2	000080	Backstop rigging is questionable.		Open	<not set>	Issue - Steel	23 Oct 2024	



2024-10-23 12:39:01

End of 000080 images

Tropicana Field Structural Assessment

Issues - Cladding

Pin	Issue ID	Description	Location Detail	Status	Company	Type	Date Created	Due Date

EXTERIOR (9 issues)

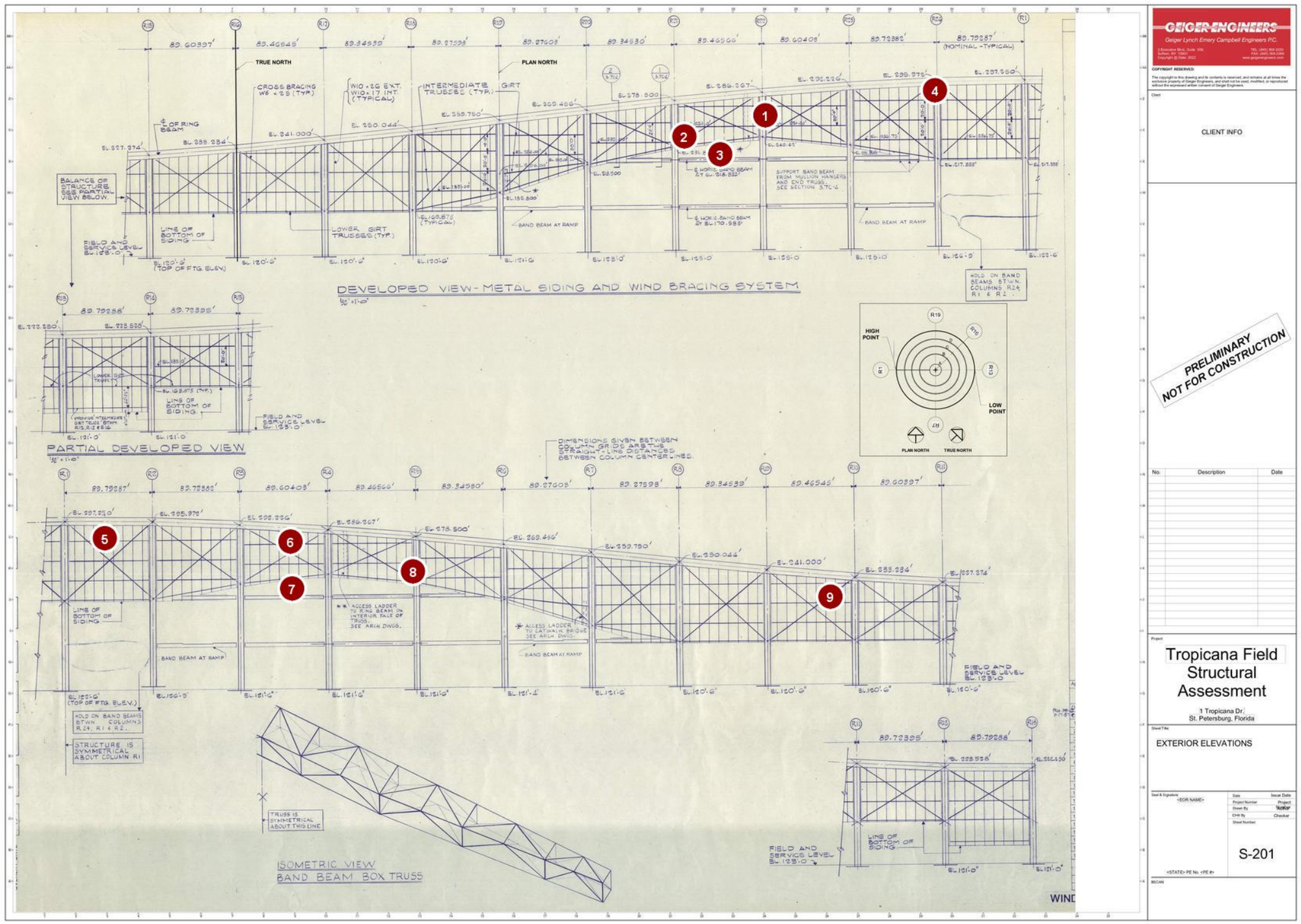

S-201 - EXTERIOR ELEVATIONS.pdf

● Draft ● Open ● Work Completed ● Ready to Inspect ● Closed ● Not Approved ● In Dispute

Issues - Cladding

Pin	Issue ID	Description	Location Detail	Status	Company	Type	Date Created	Due Date
1	000004	Damaged cladding panels.		Open	<not set>	Issue - Cladding	22 Oct 2024	



2024-10-22 09:21:36



2024-10-22 09:21:33

End of 000004 images

Issues - Cladding

Pin	Issue ID	Description	Location Detail	Status	Company	Type	Date Created	Due Date
2	000005	Damaged cladding panels.		Open	<not set>	Issue - Cladding	22 Oct 2024	



2024-10-22 09:23:27

End of 000005 images

Issues - Cladding

Pin	Issue ID	Description	Location Detail	Status	Company	Type	Date Created	Due Date
3	000006	Band beam cladding failure.		Open	<not set>	Issue - Cladding	22 Oct 2024	



2024-10-22 09:27:42

End of 000006 images

Issues - Cladding

Pin	Issue ID	Description	Location Detail	Status	Company	Type	Date Created	Due Date
4	000008	Facade failure		Open	<not set>	Issue - Cladding	22 Oct 2024	



2024-10-22 09:32:27

End of 000008 images

Issues - Cladding

Pin	Issue ID	Description	Location Detail	Status	Company	Type	Date Created	Due Date
5	000009	Facade failure		Open	<not set>	Issue - Cladding	22 Oct 2024	



2024-10-22 09:33:42



2024-10-22 09:33:38

End of 000009 images

Pin	Issue ID	Description	Location Detail	Status	Company	Type	Date Created	Due Date
6	000010	Facade failure		Open	<not set>	Issue - Cladding	22 Oct 2024	

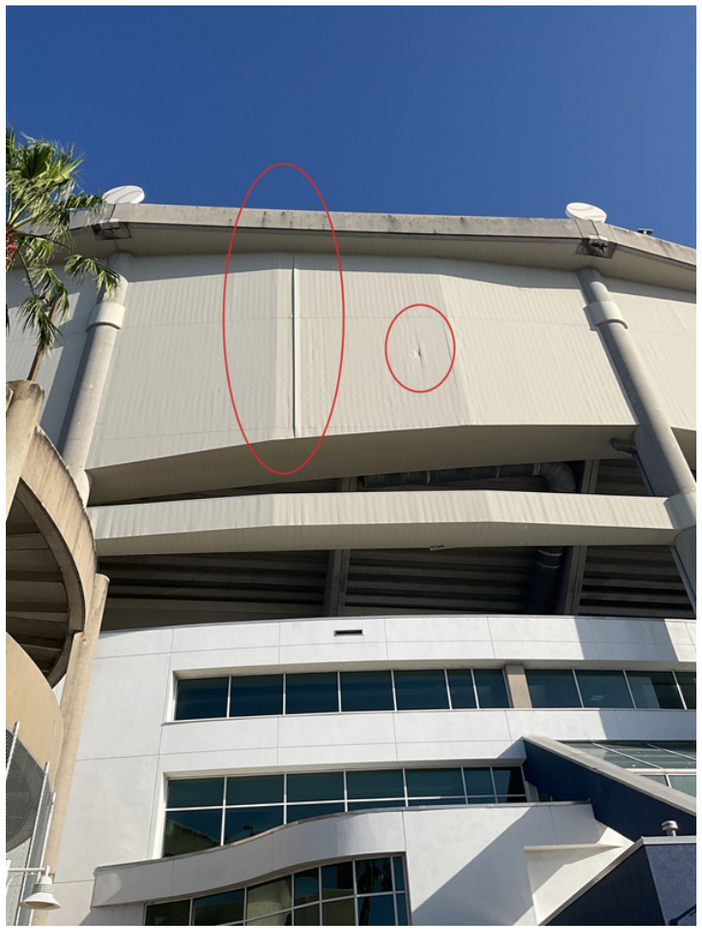

2024-10-22 09:37:46

End of 000010 images

Issues - Cladding

Pin	Issue ID	Description	Location Detail	Status	Company	Type	Date Created	Due Date
7	000011	Band beam cladding failure		Open	<not set>	Issue - Cladding	22 Oct 2024	



2024-10-22 09:38:13

End of 000011 images

Pin	Issue ID	Description	Location Detail	Status	Company	Type	Date Created	Due Date
8	000012	Facade failure		Open	<not set>	Issue - Cladding	22 Oct 2024	



2024-10-22 09:39:32

End of 000012 images

Pin	Issue ID	Description	Location Detail	Status	Company	Type	Date Created	Due Date
9	000017	Facade failure		Open	<not set>	Issue - Cladding	22 Oct 2024	



2024-10-22 09:46:10

End of 000017 images

Appendix 2 – Roof Structural Drawings

DWG #	DWG NAME	DATE
3.1C-1	ROOF OUTER FABRIC MEMBRANE & UPPER CABLE PLAN	9.10.87
3.1C-2	ROOF LOWER CABLE PLAN	9.10.87
3.1D-1	ROOF SECTIONS	9.10.87
3.1E-1	CONCEPTUAL FABRIC DETAILS	9.10.87
3.7B-1	COMPRESSION RING BEAM PART PLAN, SECTIONS & DETAILS	3.26.86
3.7B-2	COMPRESSION RING BEAM PART PLAN, SECTIONS & DETAILS	3.26.86
3.7B-3	COMPRESSION RING BEAM PART PLAN, SECTIONS & DETAILS	3.26.86
3.7B-4	COMPRESSION RING BEAM PART PLAN, SECTIONS & DETAILS	3.26.86
3.7B-5	COMPRESSION RING BEAM PART PLAN, SECTIONS & DETAILS	3.26.86
3.7C-1	WIND BRACING SYSTEM - ELEVATION	9.10.87
3.7C-2	WIND BRACING SYSTEM - SECTIONS & DETAILS	9.10.87
3.8C-1	RIDGE CABLE FABRIC CLAMP DETAILS	3.17.87
3.8D-1	DETAILS OF CASTINGS	3.26.86
3.8E-1	TYPICAL CABLE TRUSS ASSEMBLY DETAIL	3.26.86
3.8E-2	CABLE TRUSS AT COLUMN LINE R1 ASSEMBLY DETAILS	3.26.86
3.8E-3	CABLE TRUSS AT COLUMN LINE R7 ASSEMBLY DETAILS	3.26.86
3.8E-4	CABLE TRUSS AT COLUMN LINE R19 ASSEMBLY DETAILS	3.26.86
3.8H-1	CATWALK PLAN AND ELEVATION	6.22.87
3.8H-2	HOOP CATWALK & DETAILS	6.22.87
3.8H-3	BRIDGE CATWALK & CONNECTION AT POST	6.22.87
3.8H-4	BRIDGE CATWALK & CONNECTION AT TENSION & COMPRESSION RINGS	6.22.87
3.8H-5	CENTER MECHANICAL ROOM AT TENSION RING	6.22.87

LEVEL/QUADRANT | TITLE T | GRID | WALL | FINISH | NOTE | OTHER | MECHANICAL | ELECTRICAL | PLUMBING | STRUCTURAL | ACOUSTICAL
OVERLAY DATE 1-18-91

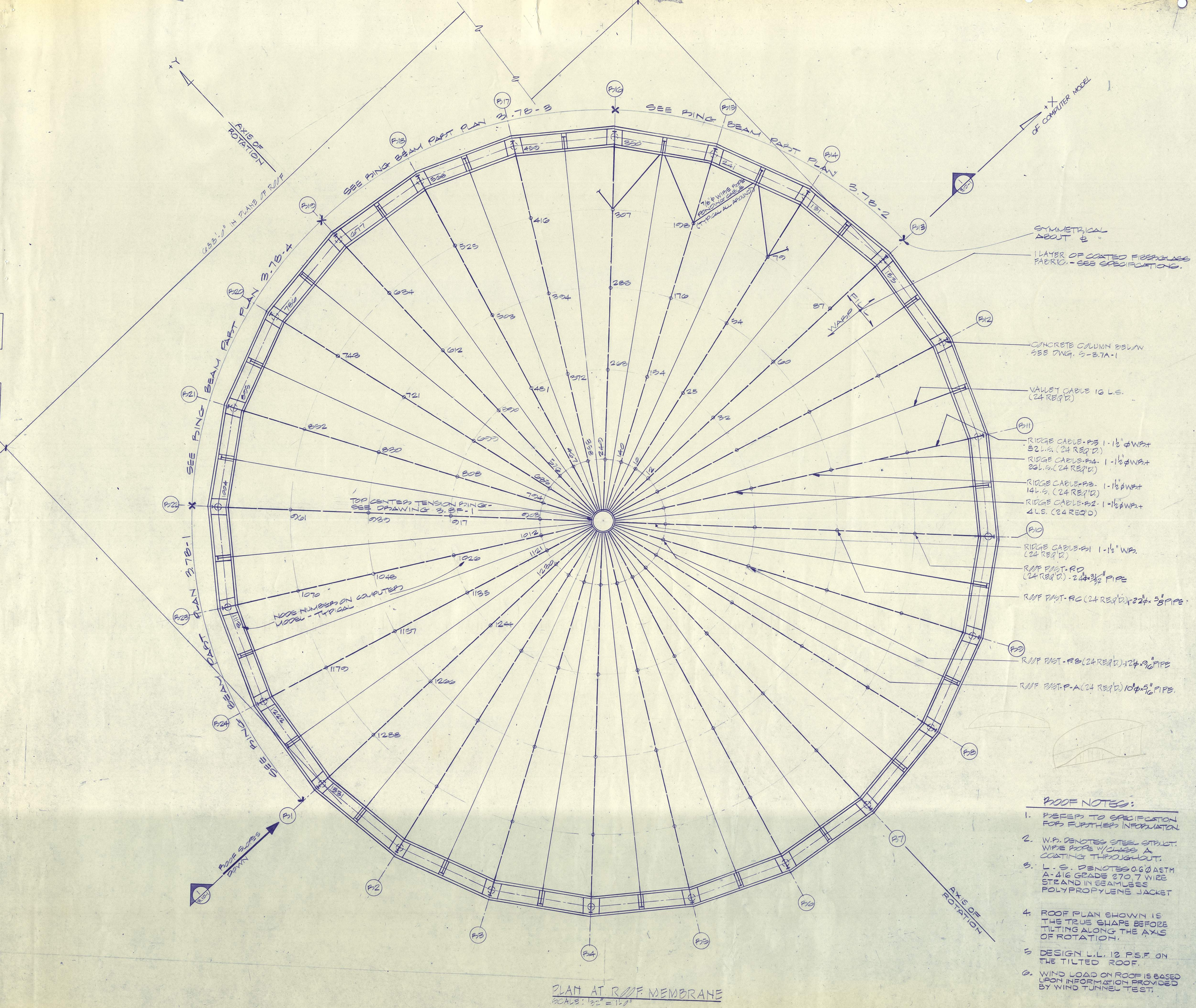

PLAN AT ROOF MEMBRANE
SCALE: 1/32" = 1'-0"

ROOF NOTES:

1. REFER TO SPECIFICATION FOR FURTHER INFORMATION.
2. W.R. DENOTES STEEL STRUCT. WIRE ROPE W/CLASS A COATING THROUGHOUT.
3. L.S. DENOTES 0.6" Ø ASTM A-416 GRADE 270, 7 WIRE STRAND IN SEAMLESS POLYPROPYLENE JACKET
4. ROOF PLAN SHOWN IS THE TRUE SHAPE BEFORE TILTING ALONG THE AXIS OF ROTATION.
5. DESIGN L.L. 12 P.S.F. ON THE TILTED ROOF.
6. WIND LOAD ON ROOF IS BASED UPON INFORMATION PROVIDED BY WIND TUNNEL TEST.

NOTES-LEGEND

KKBNA/PC ENGINEERS
STRUCTURAL, MECHANICAL, ELECTRICAL, PLUMBING
114 Fifth Avenue
New York, New York 10011 212-242-0900

POST, BUCKLEY, SCHUH & JERNIGAN, INC.
CONSULTING CIVIL ENGINEERS AND PLANNERS
260 First Avenue South
St. Petersburg, Florida 33701 813-446-7275

THE JOINER-ROSE GROUP
CONSULTANTS IN ACOUSTICS
4125 Centurion Way
Dallas, Texas 75234 214-392-7800

HELLMUTH, OBATA & KASSABAUM, INC.
ARCHITECTURE, INTERIORS, PLANNING,
GRAPHICS, ENGINEERING
323 WEST EIGHTH STREET
SUITE 700
KANSAS CITY, MISSOURI 64105
816-221-1576

HOK SPORT

KEY PLAN: D | C / A | B — R1

THE STADIUM
One Booker Creek Place
St. Petersburg, Pinellas County, Florida

Approval Dates	Owner	Owner Rep.	Contractor	Architect Consult.
DD	11·21·86	11·21·86	11·21·86	11·21·86
CD	9·10·87	9·10·87	9·10·87	9·10·87
1	9·10·87	9·10·87	9·10·87	9·10·87
2				
3				
4				
5				
6				
7				
8				
9				
10				
11				
12				
13				
14				
15				
16				
17				
18				

Project No. 4008-001

Drawn	Reviewed	Issued
		3·17·87

Revisions

No.	Description	Date
1	CACO #10	9·10·87
2		
3		
4		
5		
6		
7		
8		
9		
10		
11		
12		
13		
14		
15		
16		
17		
18		

RECORD SET OCT 30 1989 DATE

Category | Sub-Cat. | Sheet
3.1C-1

ROOF OUTER FABRIC MEMBRANE & UPPER CABLE PLAN

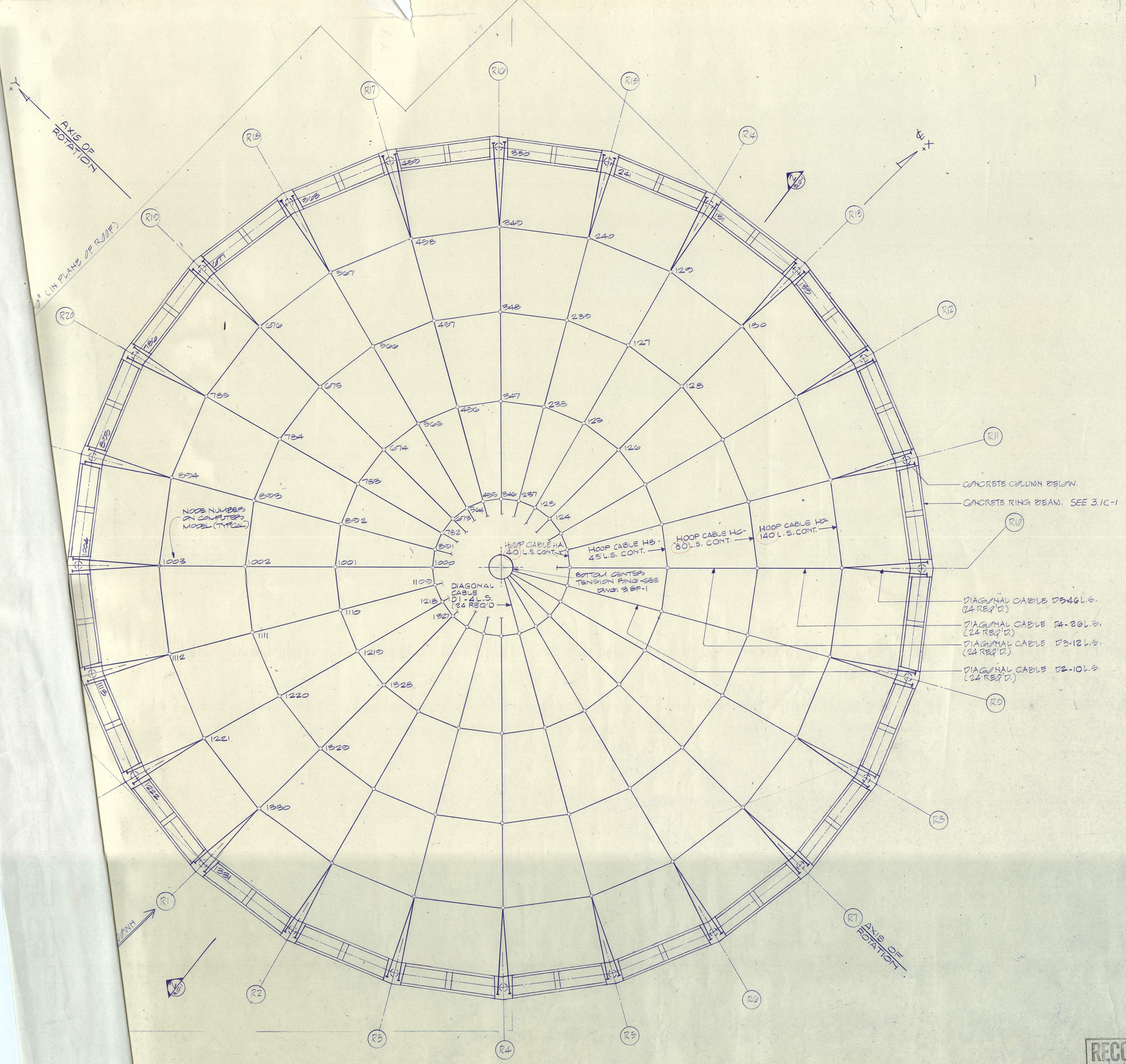

CABLE DOME ROOF - PLAN OF CABLE TRUSS SYSTEM

SCALE: 1/32" = 1'-0"

NOTES-LEGEND

RECORD SET OCT 30 1989 DATE

KKBNA/PC — ENGINEERS
STRUCTURAL, MECHANICAL, ELECTRICAL, PLUMBING
11 West 19th Street — 212-242-0900
New York, New York 10011

POST, BUCKLEY, SCHUH & JERNIGAN, INC.
CONSULTING CIVIL ENGINEERS AND PLANNERS
260 First Avenue South — 813-446-7275
St. Petersburg, Florida 33701

THE JOINER-ROSE GROUP
CONSULTANTS IN ACOUSTICS
4125 Centurion Way — 214-392-7800
Dallas, Texas 75234

HELLMUTH, OBATA & KASSABAUM, INC.
ARCHITECTURE, INTERIORS, PLANNING, GRAPHICS, ENGINEERING
323 WEST EIGHTH STREET — 816-221-1576
KANSAS CITY, MISSOURI 64105

HOK SPORT

KEY PLAN

THE STADIUM
One Booker Creek Place
St. Petersburg, Pinellas County, Florida

Approval Dates	Owner	Owner Rep.	Contractor	Architect Consult.
DD	11-21-86	11-21-86	11-21-86	11-21-86
CD	9-10-87	9-10-87	9-10-87	9-10-87
1	9-10-87	9-10-87	9-10-87	9-10-87
2				
3				
4				
5				
6				
7				
8				
9				
10				
11				
12				
13				
14				
15				
16				
17				
18				

Project No. 4008-001

Drawn	Reviewed	Issued
		3-17-87

Revisions

No.	Description	Date
1	CACO #10	9-10-87
2		
3		
4		
5		
6		
7		
8		
9		
10		
11		
12		
13		
14		
15		
16		
17		
18		

Category	Sub-Cat.	Sheet
		3.1C-2

ROOF LOWER CABLE PLAN

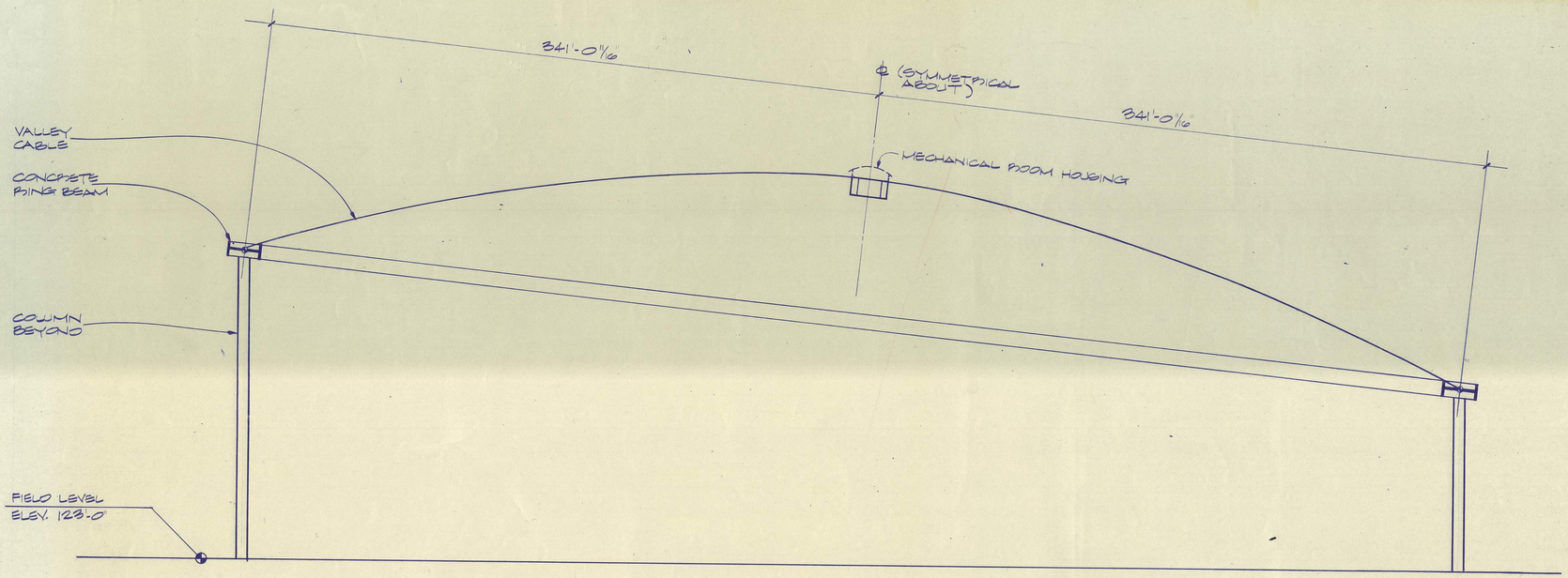

SECTION 1
1/32" = 1'-0"

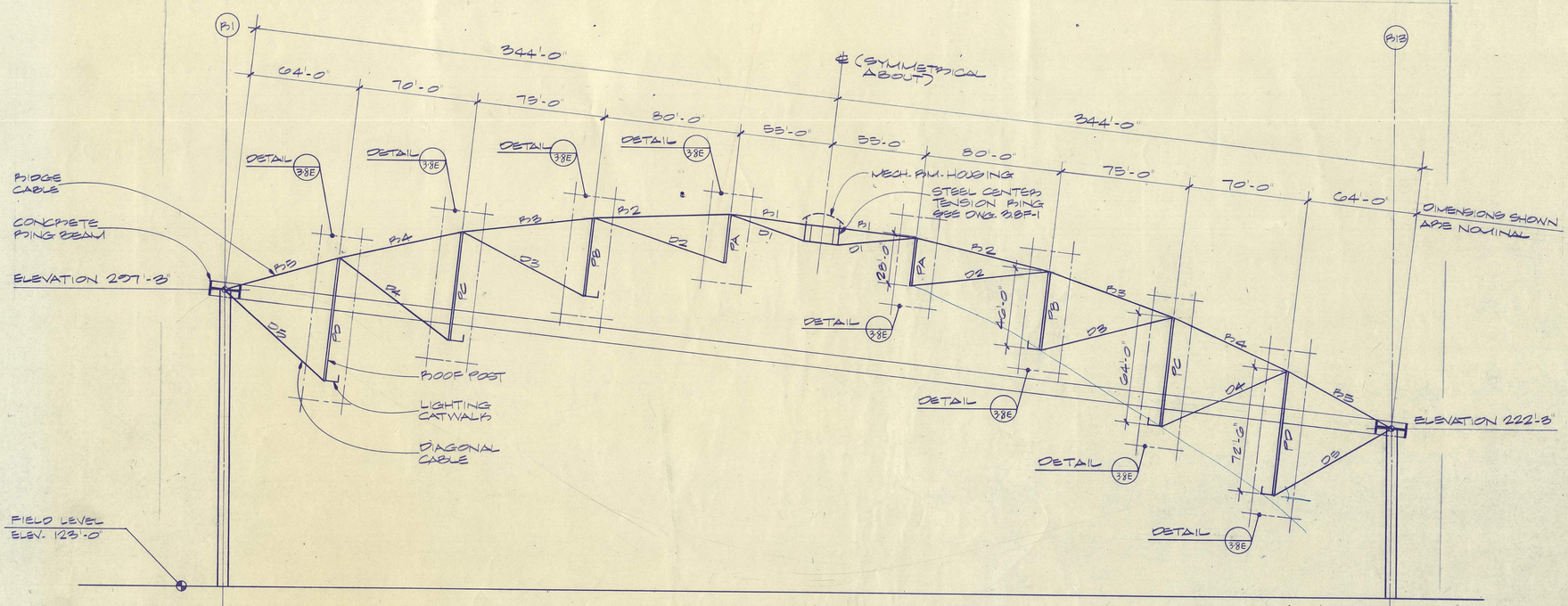

SECTION 2
1/32" = 1'-0"

RECORD SET OCT 30 1989 DATE

NOTES-LEGEND

KKBNA/PC
STRUCTURAL, MECHANICAL, ELECTRICAL, PLUMBING ENGINEERS
575 Madison Avenue
New York, New York 10011 212-242-0900

POST, BUCKLEY, SCHUH & JERNIGAN, INC.
CONSULTING CIVIL ENGINEERS AND PLANNERS
285 First Avenue South
St. Petersburg, Florida 33701 813-446-7276

THE JOINER-ROSE GROUP
TOTAL ACOUSTICS
4125 Centerview Way
Dallas, Texas 75234 214-392-7800

HELLMUTH, OBATA & KASSABAUM, INC.
ARCHITECTURE, INTERIORS, PLANNING, ENGINEERING
323 WEST 8TH STREET
SUITE 700
KANSAS CITY, MISSOURI 64105
816-221-1976

101K SPORT

D C A B
R1
KEY PLAN

THE STADIUM
One Booker Creek Place
St. Petersburg, Pinellas County, Florida

Approval Dates	Owner	Owner Rep	Contractor	Architect Consult
DD	11-21-85	11-21-85	11-21-85	11-21-85
CD	9-10-87	9-10-87	9-10-87	9-10-87
1	9-10-87	9-10-87	9-10-87	9-10-87

Project No. 4008-001

Drawn	Reviewed	Issued
		3-17-87

Revisions		
No.	Description	Date
1	CACO # 10	9-10-87

Category: 3 Sub-Cat.: 1D Sheet: 1

ROOF SECTIONS

LEVEL/QUADRANT OVERLAY DATE TITLE GRID WALL FINISH NOTE OTHER MECHANICAL ELECTRICAL PLUMBING STRUCTURAL ACOUSTICAL

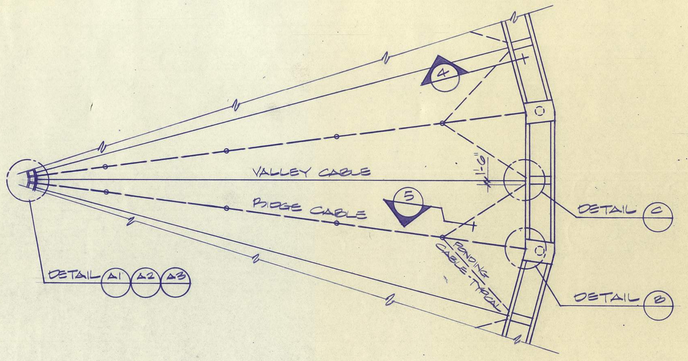

PARTIAL ROOF PLAN
1" = 40'-0"

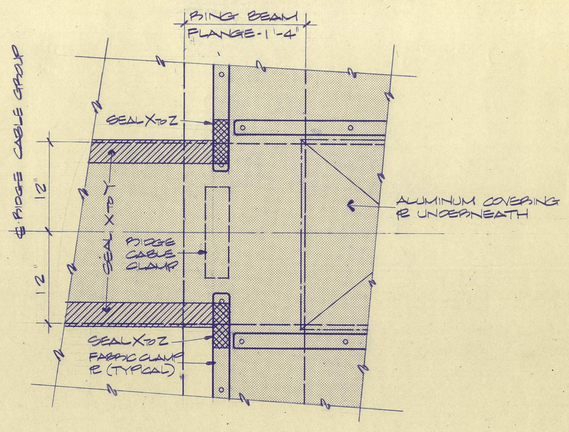

DETAIL (B)
1½" = 1'-0"

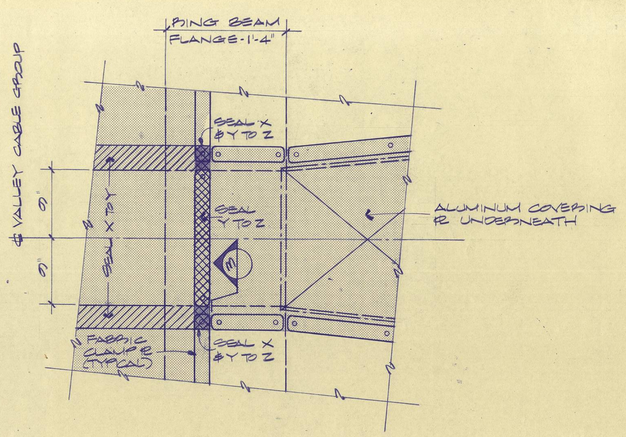

DETAIL (C)
1½" = 1'-0"

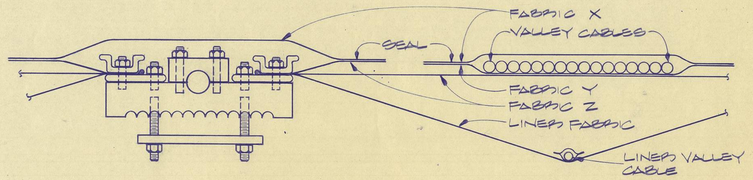

SECTION (1)
3" = 1'-0"

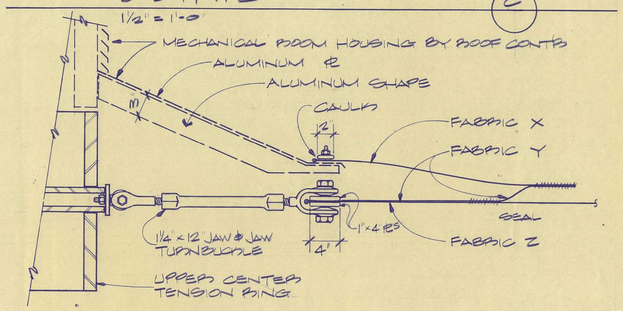

SECTION (2)
1½" = 1'-0"

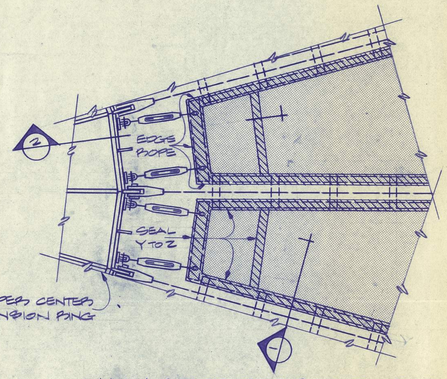

MAIN ROOF-FABRIC-Z-DETAIL (A1)
½" = 1'-0"

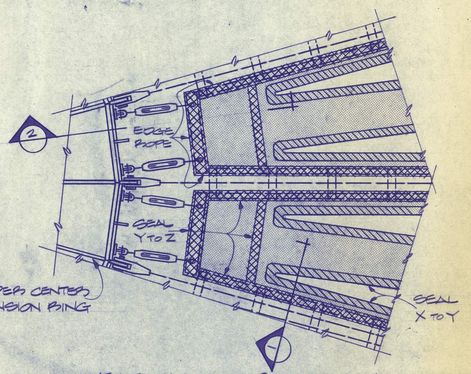

WEARING STRIP-FABRIC-Y-DETAIL (A2)
½" = 1'-0"

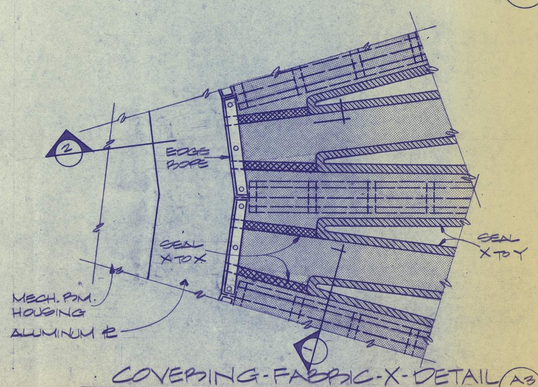

COVERING-FABRIC-X-DETAIL (A3)
½" = 1'-0"

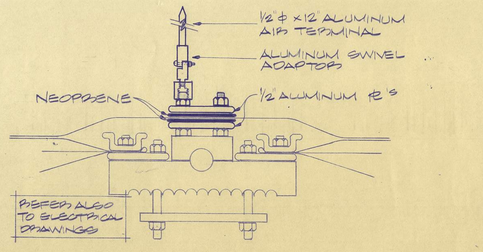

LIGHTNING PROTECTORS DETAIL
3" = 1'-0"

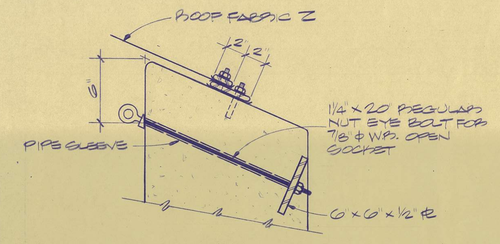

SECTION (4)
2" = 1'-0"

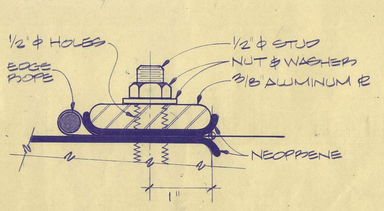

TYPICAL FABRIC CLAMP DETAIL
FULL SIZE

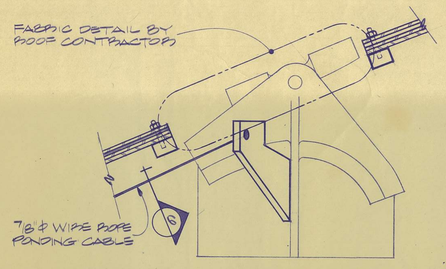

SECTION (5)

SECTION (3)

NOTES-LEGEND

KKBNA/PC
STRUCTURAL, MECHANICAL, ELECTRICAL, PLUMBING ENGINEERS
114 Fifth Avenue
New York, New York 10011
212-242-2900

POST, BUCKLEY, SCHUH & JERNIGAN, INC.
CONSULTING CIVIL ENGINEERS AND PLANNERS
250 Park Avenue, South
Winter Park, Florida 32789
813-446-7275

THE JONES-ROSE GROUP
CONSULTING ACOUSTICS
4125 Cleburton Way
Dallas, Texas 75234
214-392-7800

HELLMUTH, OBATA & KASSABAUM, INC.
ARCHITECTURE, INTERIORS, PLANNING
JAMES S. ELLINGBOE
323 WEST ELEVENTH STREET
SUITE 700
KANSAS CITY, MISSOURI 64105
816-221-1570

101K SPORT

D C A B R1
KEY PLAN

THE STADIUM
One Booker Creek Place
St. Petersburg, Pinellas County, Florida

Approval Dates	Owner	Owner Rep.	Contractor	Architect Consult.
DD	11-21-86	11-21-86	11-21-86	11-21-86
CD	9-10-87	9-10-87	9-10-87	9-10-87
1	9-10-87	9-10-87	9-10-87	9-10-87
2				
3				
4				
5				
6				
7				
8				
9				
10				
11				
12				
13				
14				
15				
16				
17				
18				

Project No. 4008-001

Drawn	Reviewed	Issued
		3.17.87

Revisions

No.	Description	Date
1	CDCO # 10	9-10-87
2		
3		
4		
5		
6		
7		
8		
9		
10		
11		
12		
13		
14		
15		
16		
17		
18		

Category | Sub-Cat. | Sheet

3.1E-1

RECORD SET OCT 30 1989
DATE

CONCEPTUAL FABRIC DETAILS

PLUMBING STRUCTURAL ACOUSTICAL ELECTRICAL MECHANICAL OTHER NOTE FINISH WALL GRID TITLE T LEVEL/QUADRANT OVERLAY DATE

WORKING POINT SCHEDULE	
COL. NO	ELEVATION
R22, R4	286.2667'
R23, R3	292.2662'
R24, R2	295.9784'
R21,	278.5000'

NOTES-LEGEND

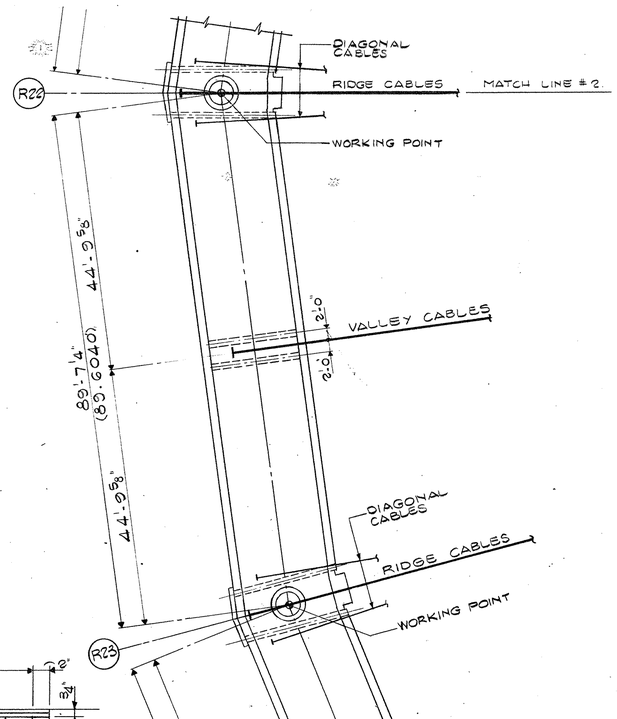

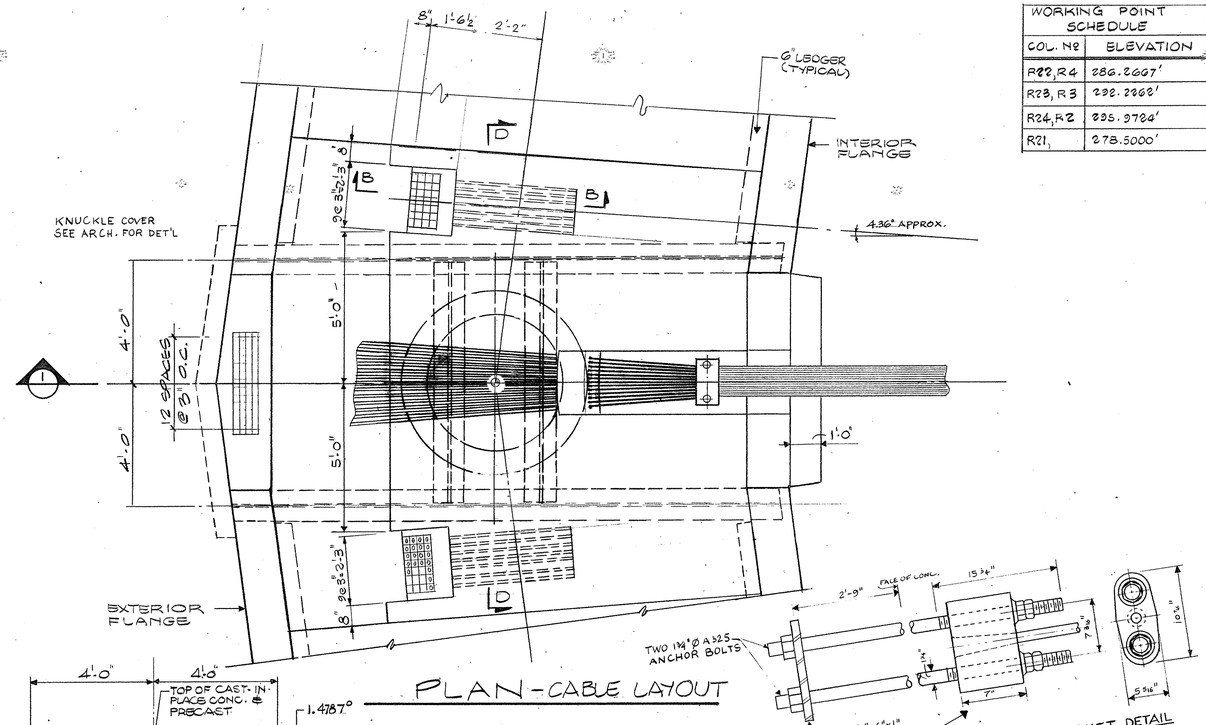

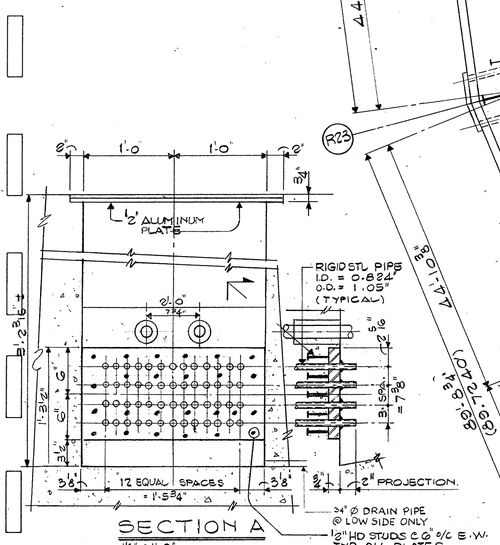

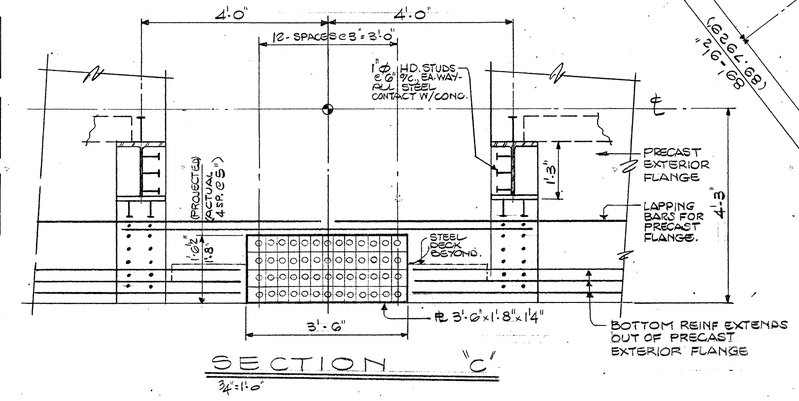

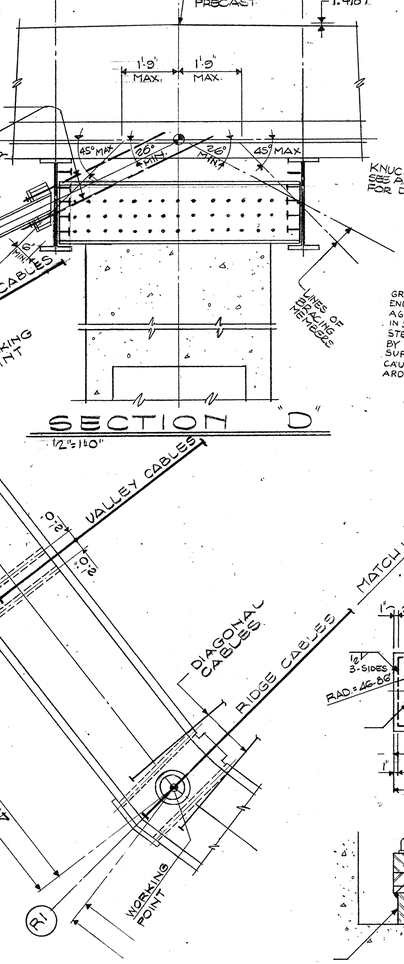

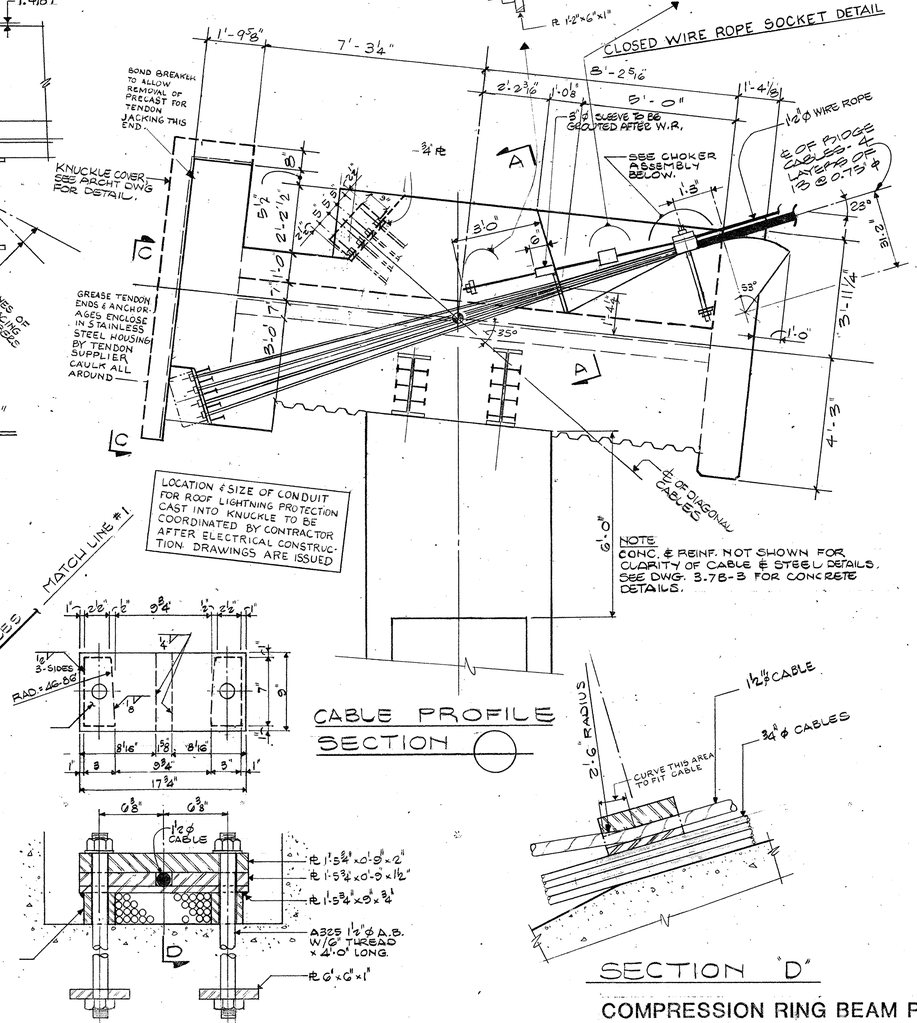

LOCATION & SIZE OF CONDUIT FOR ROOF LIGHTNING PROTECTION CAST INTO KNUCKLE TO BE COORDINATED BY CONTRACTOR AFTER ELECTRICAL CONSTRUCTION. DRAWINGS ARE ISSUED

KKBNA/PC — ENGINEERS
STRUCTURAL, MECHANICAL, ELECTRICAL, PLUMBING
TH Fifth Avenue, New York, New York 10011 — 212-242-0900

POST, BUCKLEY, SCHUH & JERNIGAN, INC.
CIVIL/SITE ENGINEERING, PLANNING, LANDSCAPE ARCHITECTURE AND PLANNERS
St. Petersburg, Florida 33701 — 813-446-7275

HELLMUTH, OBATA & KASSABAUM, INC.
PLANNING, ARCHITECTURE, INTERIORS, PLANNING, GRAPHICS, ENGINEERING
323 WEST EIGHTH STREET, SUITE 501, KANSAS CITY, MISSOURI 64105
816-221-1876

THE JONNER-ROSE GROUP
CONSULTANTS IN ACOUSTICS
4151 Cemetery Way, Dallas, Texas 75244 — 214-392-7800

10K SPORT

CONSTRUCTION PACKAGE 3B- PART 2
PRECAST STADIUM STRUCTURE & ROOF STRUCTURE
SCOPE APPROVAL 3/17/87

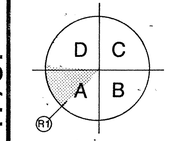

THE STADIUM
One Booker Creek Place
St. Petersburg, Pinellas County, Florida

Approval Dates	Owner	Owner Rep.	Construct. Manager	Architect Consult.
DD	11-21-86	11-21-86	11-21-86	11-21-86
CD				

Project No. 4008-001/9541.01		
Drawn	Reviewed	Issued
Revisions DD 3-26-86		

No.	Description	Date
1		
2		
3		
4		
5		
6		
7		
8		
9		
10		
11		
12		
13		
14		
15		
16		
17		
18		

Category	Sub-Cat.	Sheet
		3.7B -1

COMPRESSION RING BEAM PART PLAN, SECTIONS & DETAILS

STRUCTURAL | ACOUSTICAL | PLUMBING | ELECTRICAL | MECHANICAL | OTHER | NOTE | FINISH | WALL | GRID | TITLE | LEVEL/QUADRANT | OVERLAY DATE

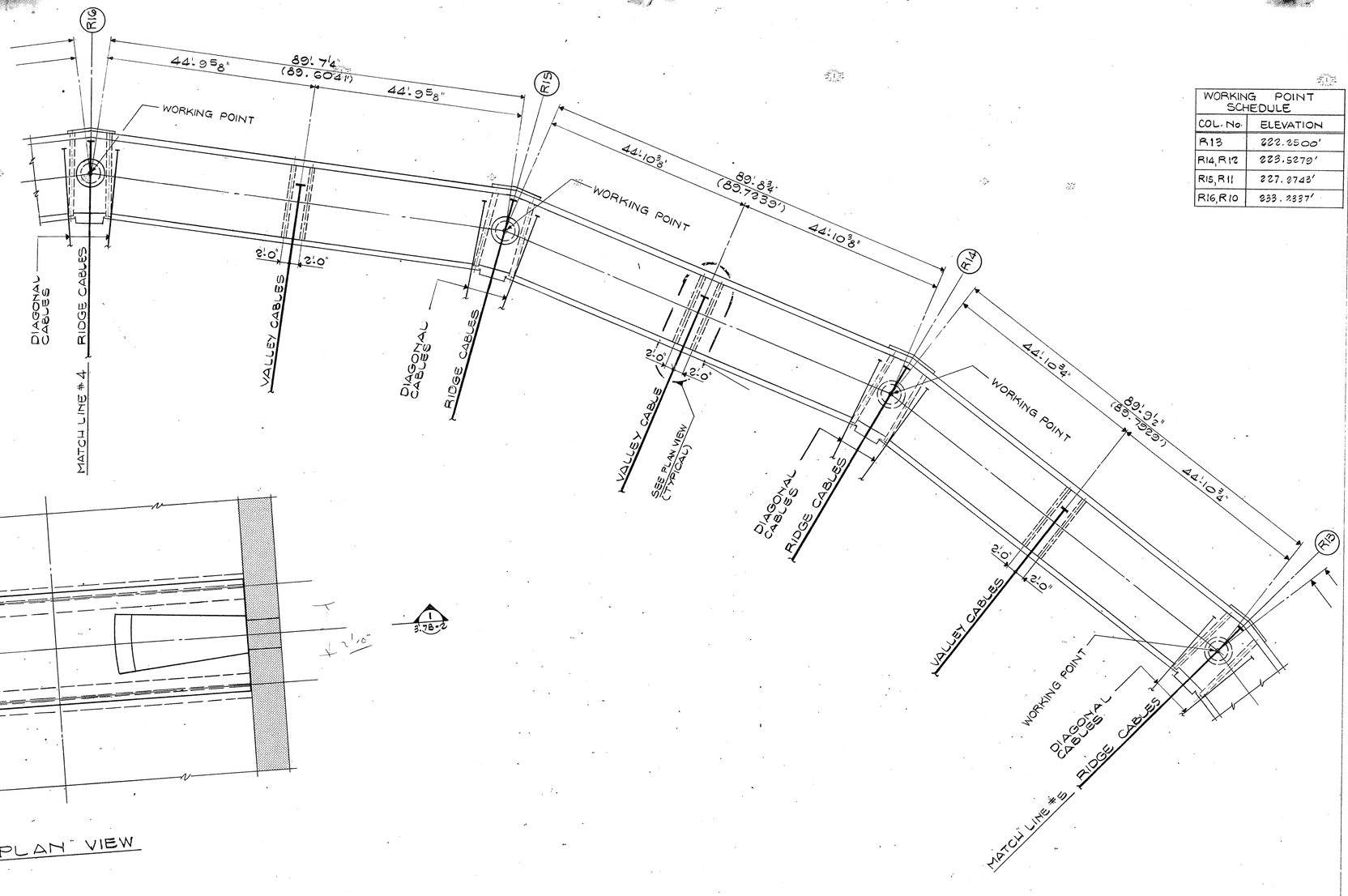

WORKING POINT SCHEDULE	
COL. No.	ELEVATION
R13	222.2500'
R14, R12	223.5279'
R15, R11	227.2743'
R16, R10	233.2337'

PLAN VIEW

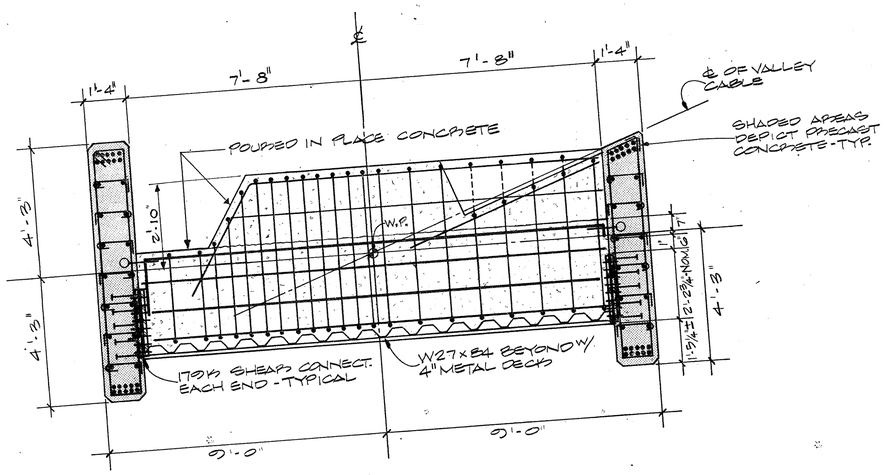

SECTION 1 / 3.7B-2

NOTES-LEGEND

ROOF FRAME GENERAL NOTES

MATERIAL

1. Structural Steel: Bearing plates, Anchor plates shall be ASTM A36, fy = 36 KSI
2. Concrete:
   a. Precast concrete shall be normal weight stone concrete f'c = 5,000 at 28 days.
   b. Cast-in-Place concrete shall be normal weight concrete f'c = 4,000 at 28 days.
3. Reinforcing Steel: ASTM A615, fy = 60 KSI
4. Structural Tubing: Used as sleeve or conduit shall be U.L. listed Schedule 40, galvanized standard rigid steel conduit; ID = 0.824 inch, OD = 1.05 inch.
5. Roof Cable: Roof cables, such as ridge, valley, diagonal, hoop cable are of unbonded 7-wire strands with diameter of 0.6 inch and conformed to ASTM A-416. The corrosion inhibitor shall conform to ASTM D-1743. The polypropylene sheath shall conform to Fed. Spec. L-P-3936.
6. Anchor Bolts: Shall be ASTM A325 Grade.
7. Studs and Deformed Bar Anchors: ASTM A108 and ASTM A496.

WORK

1. Precast ring beam and roof column sections shall be designed by precast contractor based on the "Roof Frame Analysis Member Force Summary" in Appendix A of Specification Section 03410. Design calculations shall be submitted for review and approval by the Engineer before construction.
2. Precast concrete member stresses due to casting, transportation, handling and erection will be the responsibility of precast concrete contractor.
3. Coordination of dimensions and fitness of all wire rope fittings, shackles, eyelets, boss plates, fabric anchoring, stud bolts, steel tubing conduits for the roof cables and anchoring plates shall be coordinated by the contractors.

2-10-87

KKBNA/PC — ENGINEERS
STRUCTURAL, MECHANICAL, ELECTRICAL, PLUMBING
Th Fifth Avenue, New York, New York 10011 212-242-0900

POST, BUCKLEY, SCHUH & JERNIGAN, INC.
CONSULTING CIVIL ENGINEERS AND PLANNERS
400 Madeira Avenue, St. Petersburg, Florida 33701 813-446-7275

HELLMUTH, OBATA & KASSABAUM, INC.
ARCHITECTURE, INTERIORS, PLANNING, GRAPHICS, ENGINEERING
323 WEST EIGHTH STREET, SUITE 500, KANSAS CITY, MISSOURI 64105
816-221-1976

THE JONER-ROSE GROUP
CONSULTANTS IN ACOUSTICS
4125 Centurion Way, Addison, Texas 75234 214-392-7500

sportk

SPORT

CONSTRUCTION PACKAGE 3B- PART 2
PRECAST STADIUM STRUCTURE & ROOF STRUCTURE
SCOPE APPROVAL 3/17/87

KEY PLAN

THE STADIUM
One Booker Creek Place
St. Petersburg, Pinellas County, Florida

Approval Dates	Owner	Owner Rep.	Construct. Manager	Architect Consult.	
DD	11-21-86	11-21-86	11-21-86	11-21-86	
CD					
1					
2					
3					
4					
5					
6					
7					
8					
9					
10					
11					
12					
13					
14					
15					
16					
17					
18					

Project No. 4008-001/9541.01

Drawn	Reviewed	Issued

Revisions DD 3-26-86

No.	Description	Date
1		
2		
3		
4		
5		
6		
7		
8		
9		
10		
11		
12		
13		
14		
15		
16		
17		
18		

Category	Sub-Cat.	Sheet
		3.7B-2

COMPRESSION RING BEAM PART PLAN, SECTIONS & DETAILS

LEVEL/QUADRANT ☐ OVERLAY DATE ☐ TITLE T ☐ GRID ☐ WALL ☐ FINISH ☐ NOTE ☐ OTHER ☐ MECHANICAL ☐ ELECTRICAL ☐ PLUMBING ☐ STRUCTURAL ☐ ACOUSTIGAL ☐

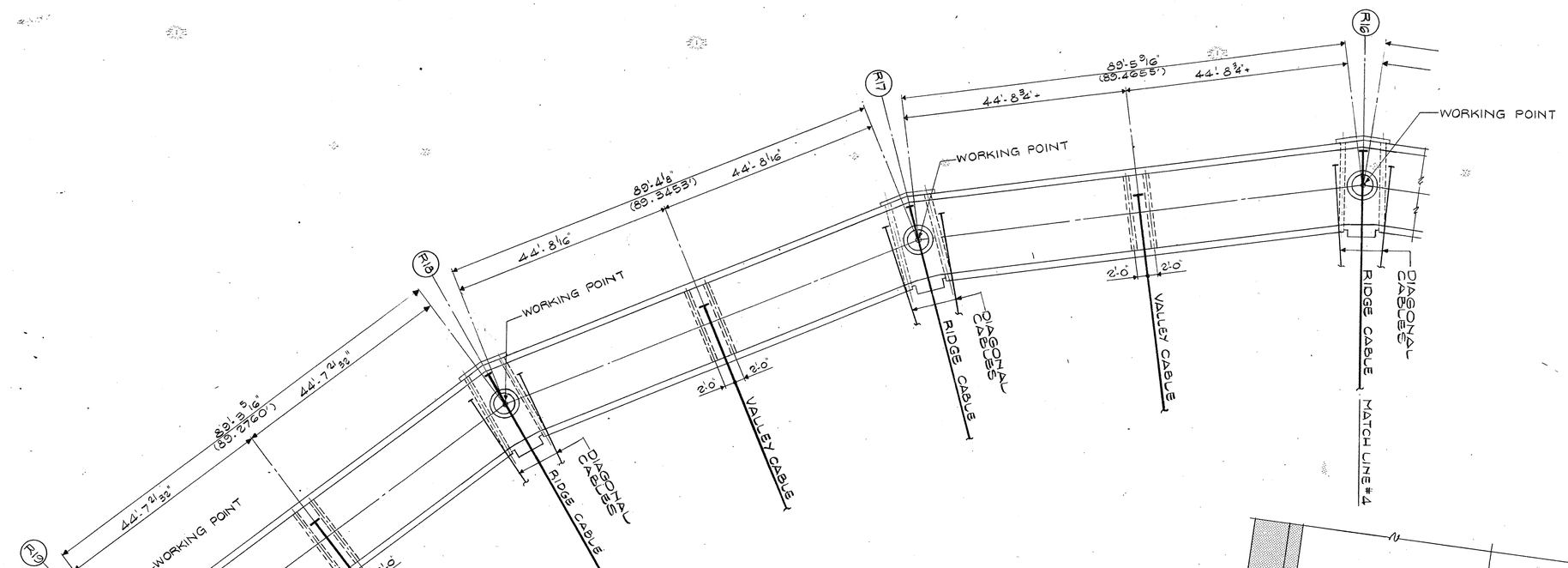

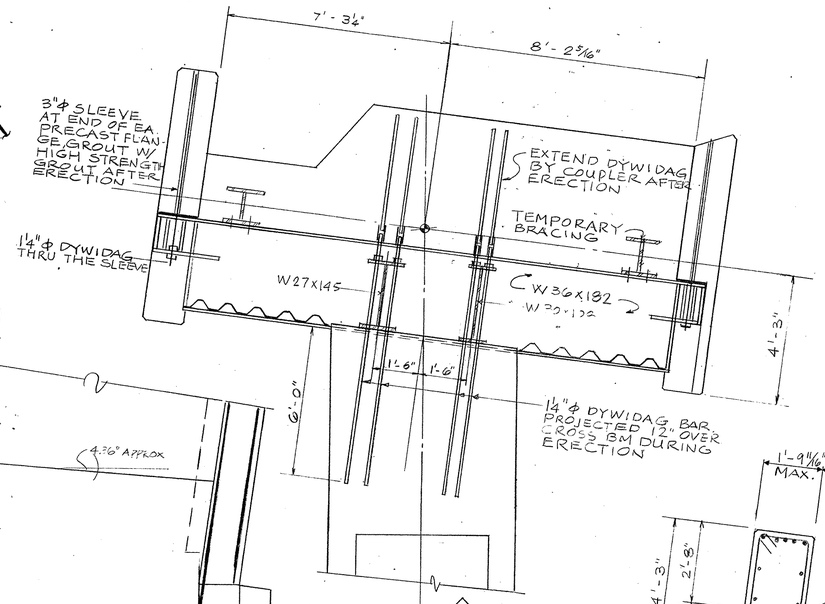

SECTION 1

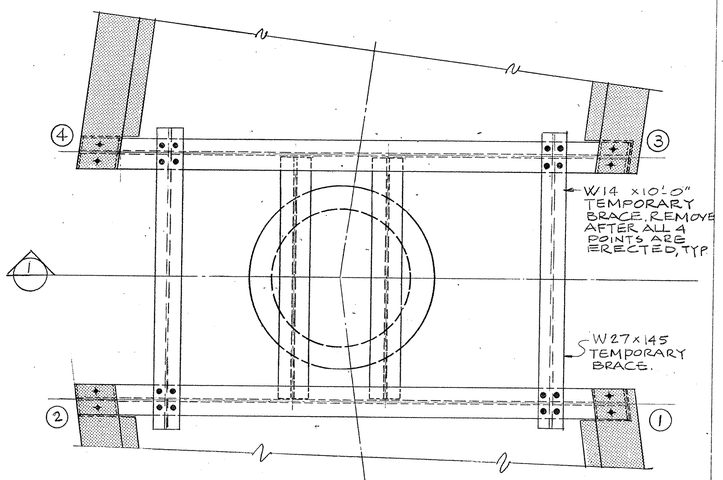

PLAN - KNUCKLE STEEL ASSEMBLY

½" = 1'-0"

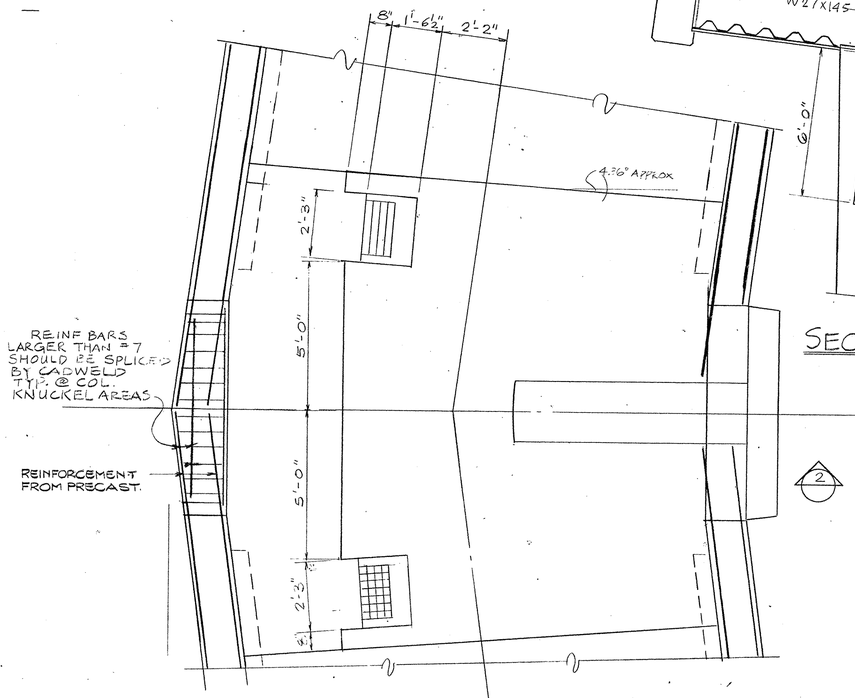

CONCRETE AREA AT KNUCKLE

½" = 1'-0"

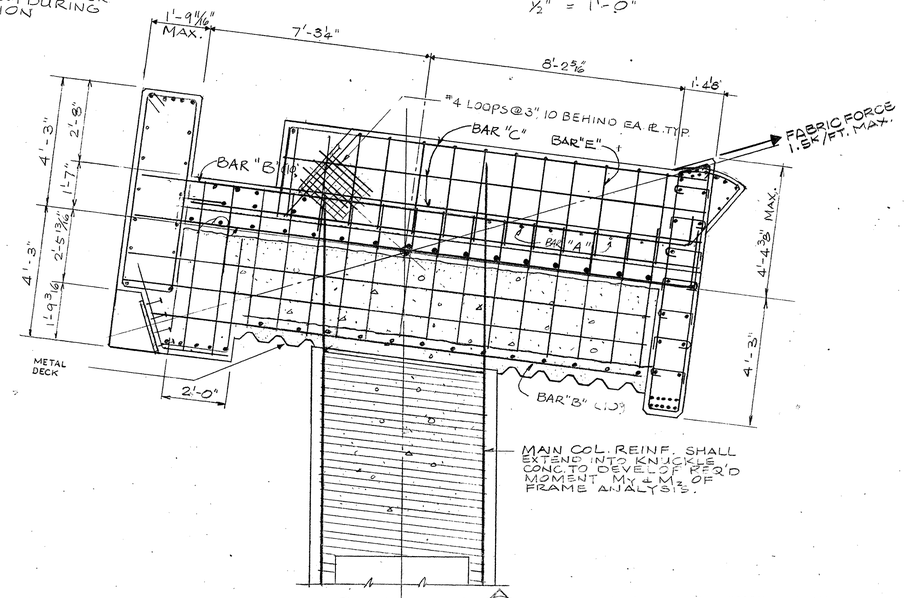

SECTION 2

COMPRESSION RING BEAM PART PLAN, SECTIONS & DETAILS

WORKING POINT SCHEDULE	
COL. No	ELEVATION
R16, R10	233.2337
R17, R9	241.0000
R16, R8	250.0445
R19, R7	259.7500

NOTES-LEGEND

CONSTRUCTION PACKAGE 3B- PART 2
PRECAST STADIUM STRUCTURE & ROOF STRUCTURE
SCOPE APPROVAL 3/17/87

KKBNA/PC
STRUCTURAL, MECHANICAL, ELECTRICAL, PLUMBING ENGINEERS
New York, New York 10011 212-242-0900

POST, BUCKLEY, SCHUH & JERNIGAN, INC.
CONSULTING CIVIL ENGINEERS AND PLANNERS
250 First Avenue, South
St. Petersburg, Florida 33701 813-446-7275

THE JOINER-ROSE GROUP
ACOUSTICS
4123 Cedar Springs
Dallas, Texas 75234 214-522-7800

HELLMUTH, OBATA & KASSABAUM, INC.
ARCHITECTURE, INTERIORS, PLANNING, GRAPHICS AND PRODUCTS
323 WEST EIGHTH STREET
SUITE 700
KANSAS CITY, MISSOURI 64105
816-221-1276

101 INTK SPORT

KEY PLAN

THE STADIUM
One Booker Creek Place
St. Petersburg, Pinellas County, Florida

Approval Dates	Owner	Owner Rep.	Construct. Manager	Architect Consult.
DD	11-21-86	11-21-86	11-21-86	11-21-86
CD				

Project No. 4008-001/9541.01

Drawn	Reviewed	Issued

Revisions DD 3-26-86

No.	Description	Date
1		
2		
3		
4		
5		
6		
7		
8		
9		
10		
11		
12		
13		
14		
15		
16		
17		
18		

Category	Sub-Cat.	Sheet
		3.7B-3

LEVEL/QUADRANT | OVERLAY DATE | TITLE | GRID | WALL | FINISH | NOTE | OTHER | MECHANICAL | ELECTRICAL | PLUMBING | STRUCTURAL | ACOUSTICAL

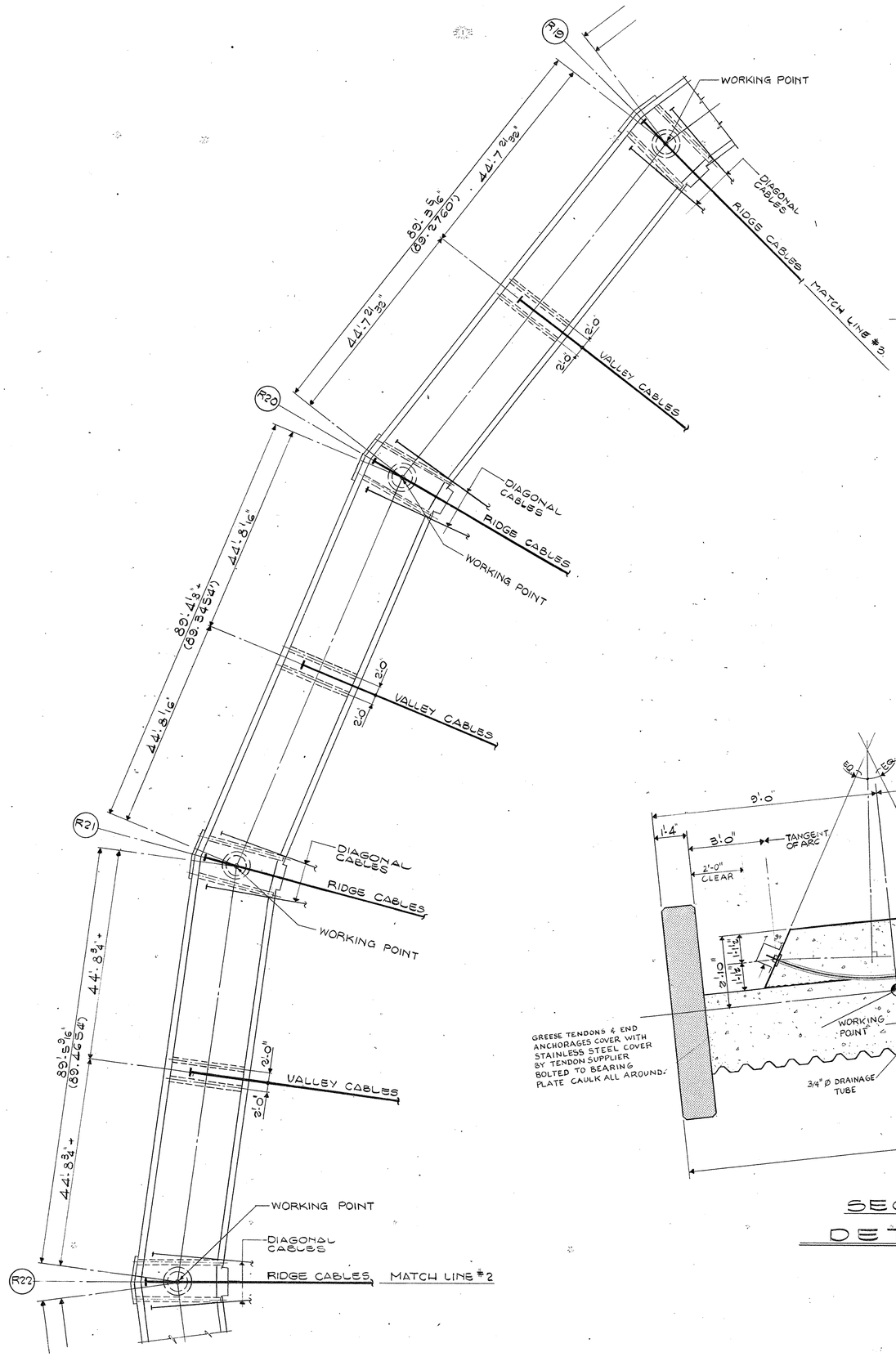

WORKING POINT SCHEDULE	
COL. No.	ELEVATION
R19, R7	259.7500
R20, R6	269.4559
R21, R5	278.5000
R22, R4	286.2667

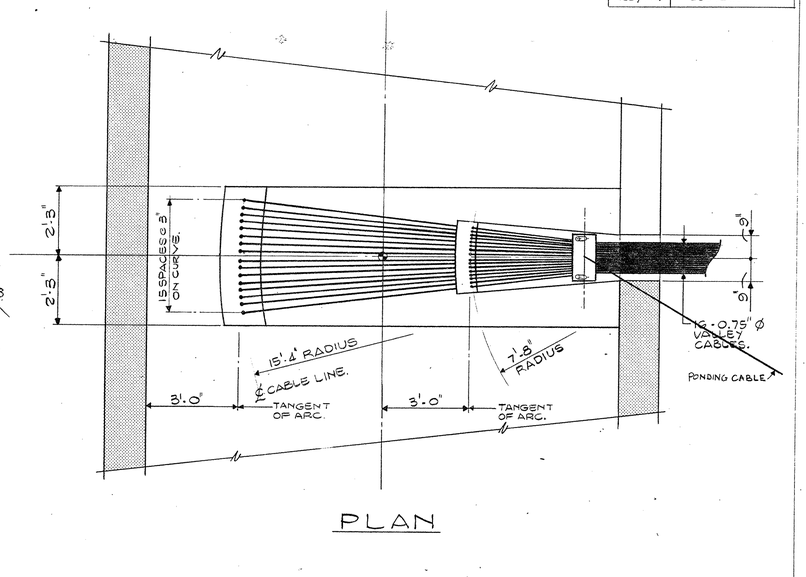

PLAN

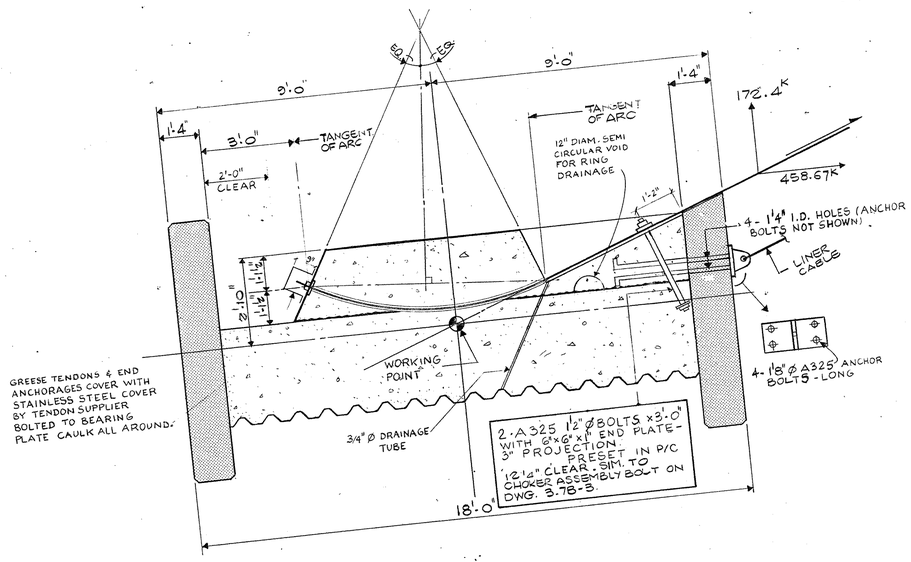

SECTION

DETAIL "B"

NOTES-LEGEND

CONSTRUCTION PACKAGE 3B- PART 2
PRECAST STADIUM STRUCTURE & ROOF STRUCTURE
SCOPE APPROVAL 3/17/87

KKBNA/PC — ENGINEERS
STRUCTURAL, MECHANICAL, ELECTRICAL, PLUMBING
19 Fifth Avenue, New York, New York, 10011 — 212-242-0900

POST, BUCKLEY, SCHUH & JERNIGAN, INC.
CIVIL, STRUCTURAL, ENGINEERS AND PLANNERS
285 First Avenue South, St. Petersburg, Florida 33701 — 813-446-7275

THE JOINER-ROSE GROUP
CONSULTANTS IN ACOUSTICS
4245 Kemp Blvd., Suite 224, Wichita Falls, Texas 76308 — 214-692-7600

HELLMUTH, OBATA & KASSABAUM, INC.
ARCHITECTURE, INTERIORS, PLANNING, GRAPHICS, ENGINEERING
2345 GRAND EIGHTH STREET, SUITE 700, KANSAS CITY, MISSOURI 64105
816-221-1919

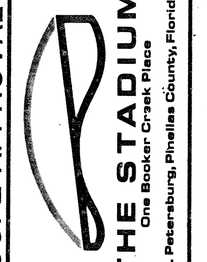

KEY PLAN

THE STADIUM
One Booker Creek Place
St. Petersburg, Pinellas County, Florida

Approval Dates	Owner	Owner Rep.	Construct. Manager	Architect Consult.	
DD	11-21-86	11-21-86	11-21-86	11-21-86	
CD					
1					
2					
3					
4					
5					
6					
7					
8					
9					
10					
11					
12					
13					
14					
15					
16					
17					
18					

Project No. 4008-001/9541.01

Drawn	Reviewed	Issued

Revisions DD 3-26-86

No.	Description	Date
1		
2		
3		
4		
5		
6		
7		
8		
9		
10		
11		
12		
13		
14		
15		
16		
17		
18		

Category: — Sub-Cat.: — Sheet: 3.7B-4

COMPRESSION RING BEAM PART PLAN, SECTIONS & DETAILS

LEVEL/QUADRANT — OVERLAY DATE
TITLE T — GRID — WALL — FINISH — NOTE — OTHER — MECHANICAL — ELECTRICAL — PLUMBING — STRUCTURAL — ACOUSTICAL

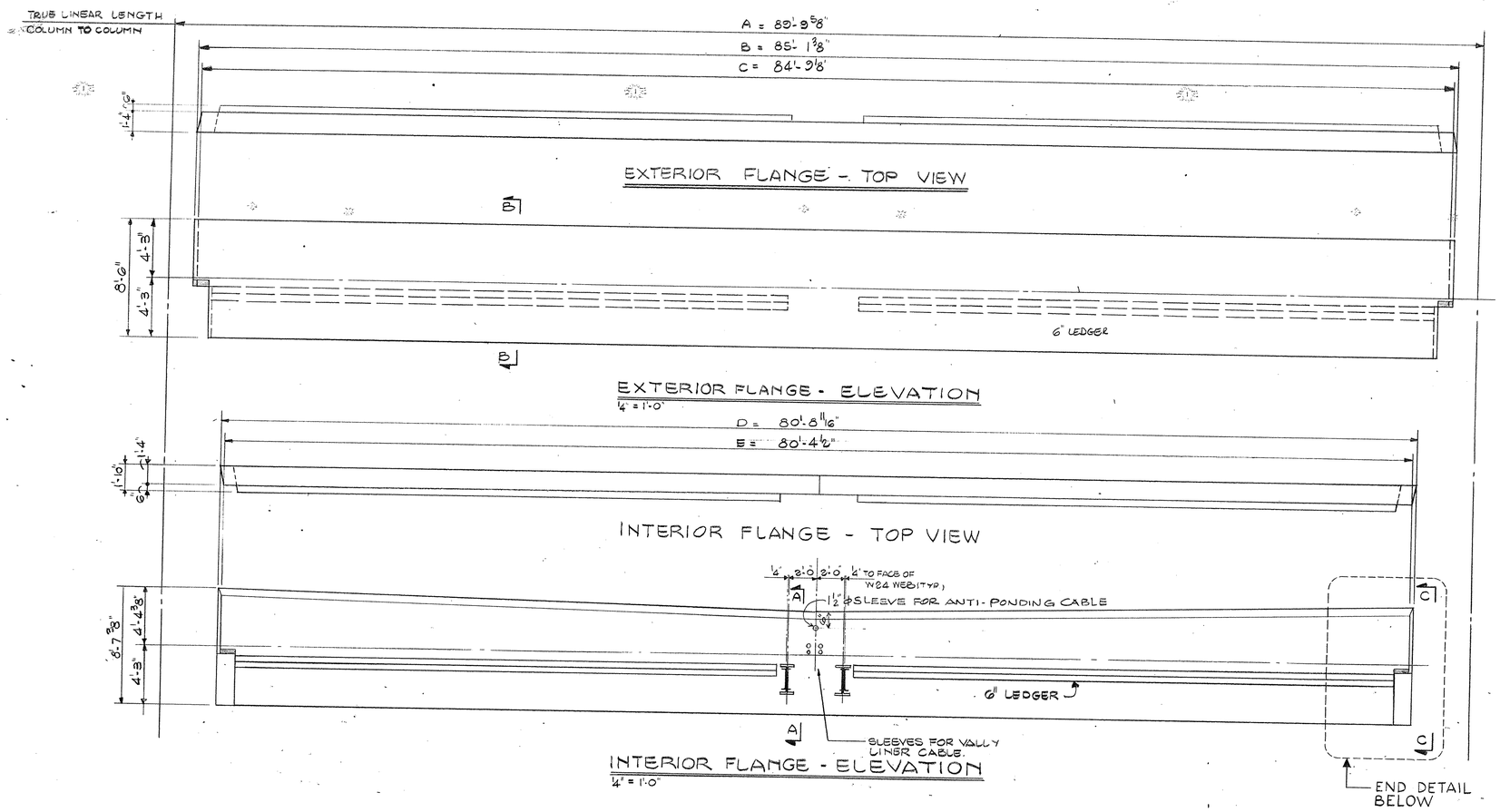

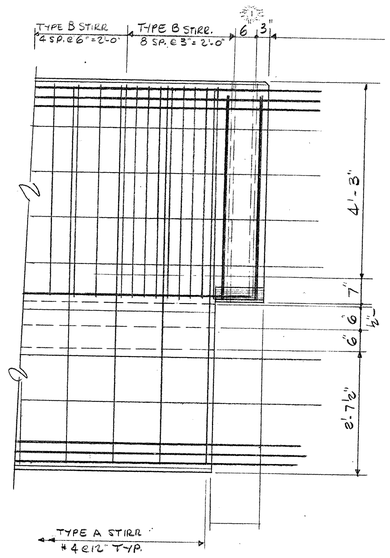

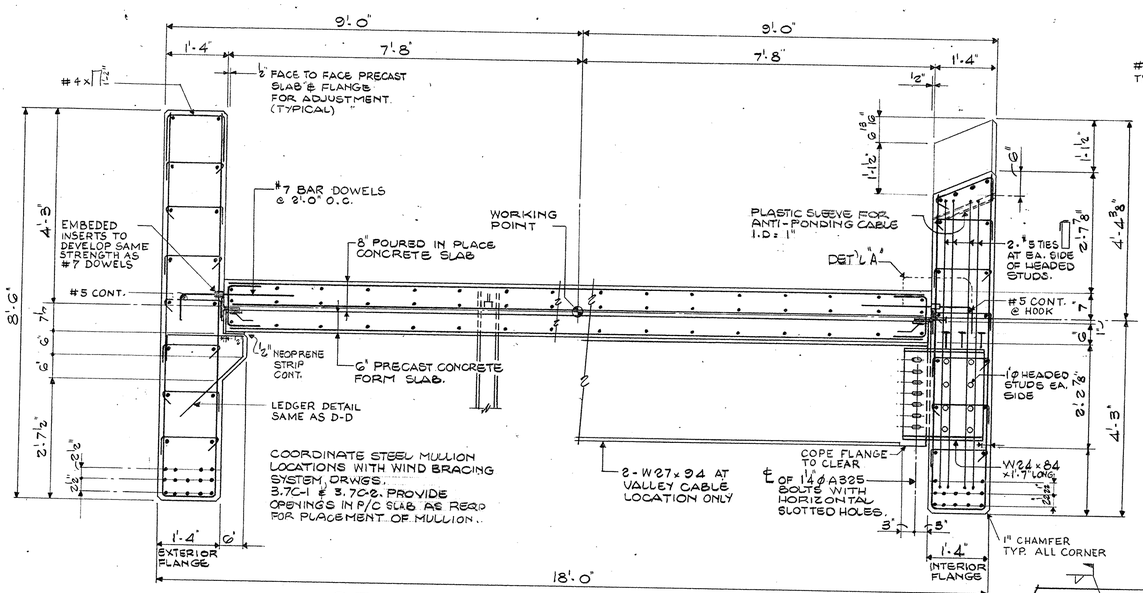

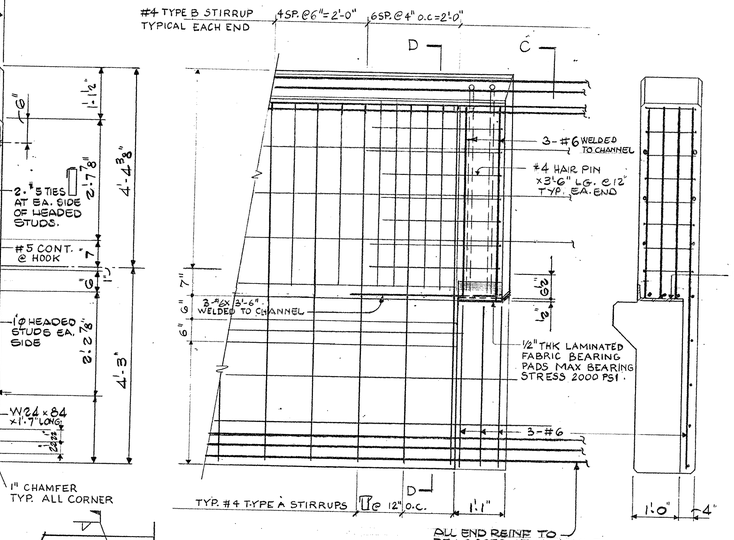

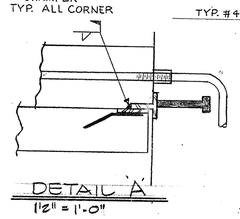

TYPICAL PRECAST CONC. RING BEAM SECTION

NOTE: CONTRACTOR COORDINATE ROOF DRAIN OPENING LOCATIONS AND SIZES WITH PLUMBING DRAWINGS & MECHANICAL SUB-CONTRACTOR AFTER THE PLUMBING DRAWINGS ARE ISSUED FOR CONSTRUCTION.

NOTES-LEGEND

CONSTRUCTION PACKAGE 3B- PART 2
PRECAST STADIUM STRUCTURE & ROOF STRUCTURE
SCOPE APPROVAL 3/17/87

KKBNA/PC — STRUCTURAL, MECHANICAL, ELECTRICAL, PLUMBING ENGINEERS
99 Fifth Avenue, New York, New York 10011 — 212-243-0900

POST, BUCKLEY, SCHUH & JERNIGAN, INC. — CIVIL ENGINEERS AND PLANNERS
250 Third Avenue North, Suite 400, St. Petersburg, Florida 33701 — 813-446-7275

THE JOINER-ROSE GROUP — CONSULTANTS IN ACOUSTICS
1825 Centurion Way, Dallas, Texas 75234 — 214-392-7800

HELLMUTH, OBATA & KASSABAUM, INC. — ARCHITECTURE, INTERIORS, PLANNING, GRAPHICS, ENGINEERING
323 West Eighth Street, Suite 700, Kansas City, Missouri 64105 — 816-421-1074

HOK SPORT

KEY PLAN

THE STADIUM
One Booker Creek Place
St. Petersburg, Pinellas County, Florida

Approval Dates	Owner	Owner Rep.	Construct. Manager	Architect Consult.
DD	11-21-86	11-21-86	11-21-86	11-21-86
CD				

Project No. 4008-001/9541.01		
Drawn	Reviewed	Issued

Revisions DD 3-26-86		
No.	Description	Date
1		
2		
3		
4		
5		
6		
7		
8		
9		
10		
11		
12		
13		
14		
15		
16		
17		
18		

Category	Sub-Cat.	Sheet
		3.7B-5

COMPRESSION RING BEAM ELEVATIONS & SECTIONS

ACOUSTICAL | STRUCTURAL | PLUMBING | ELECTRICAL | MECHANICAL | OTHER | NOTE | FINISH | WALL | GRID | TITLE | LEVEL/QUADRANT | OVERLAY DATE

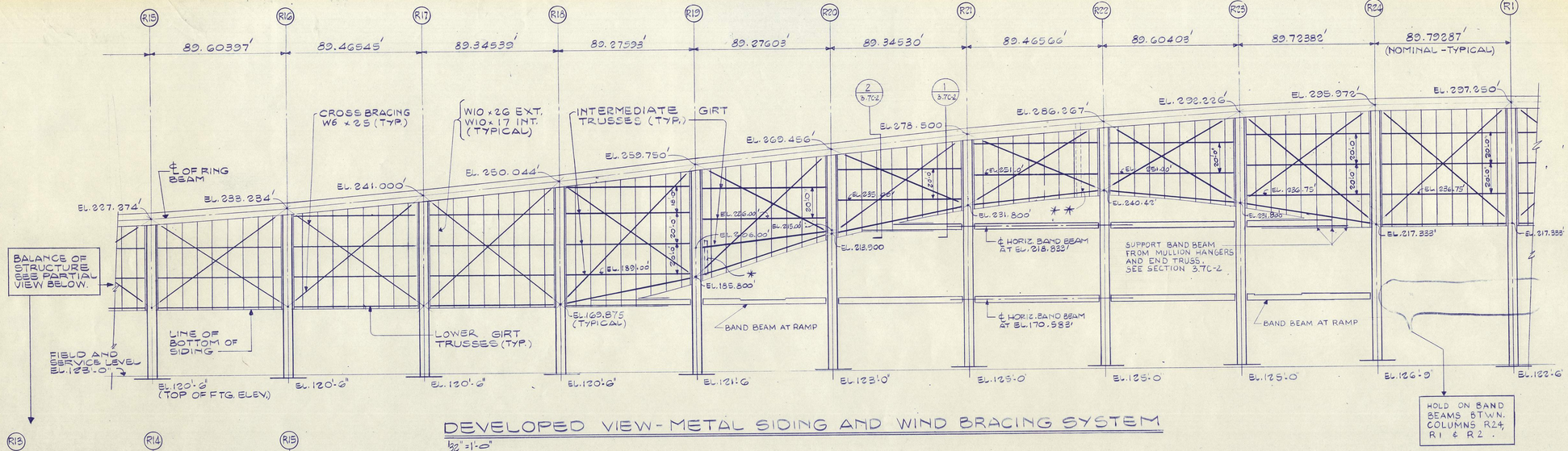

DEVELOPED VIEW - METAL SIDING AND WIND BRACING SYSTEM

1/32" = 1'-0"

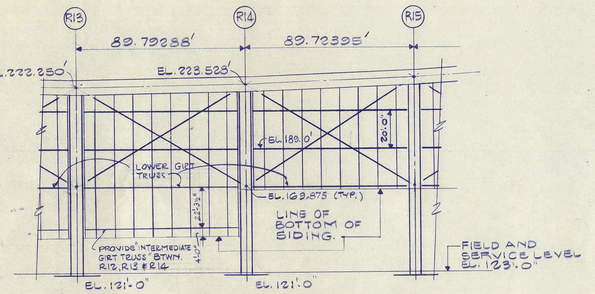

PARTIAL DEVELOPED VIEW

1/32" = 1'-0"

DIMENSIONS GIVEN BETWEEN COLUMN GRIDS ARE THE STRAIGHT-LINE DISTANCES BETWEEN COLUMN CENTER LINES.

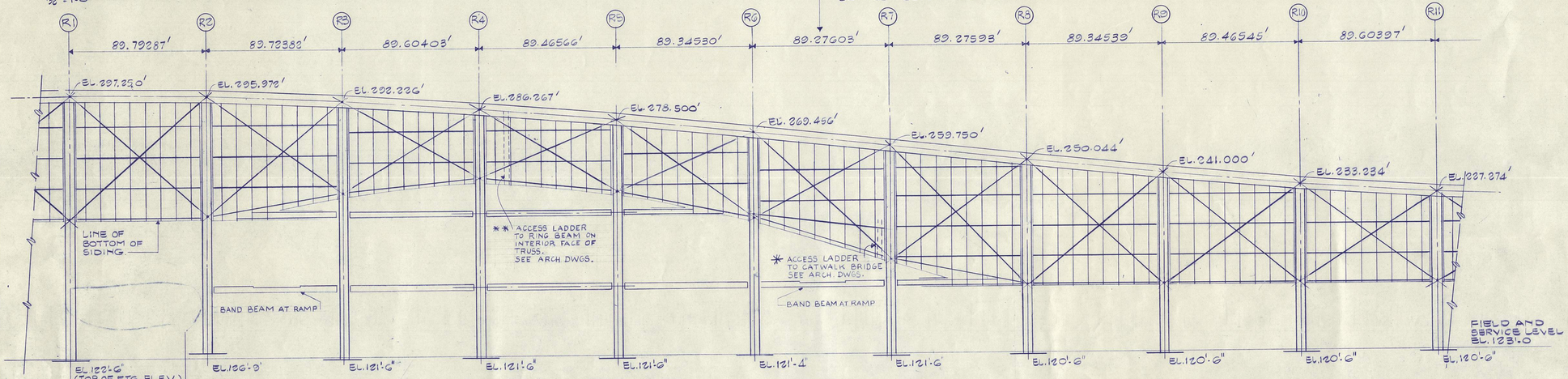

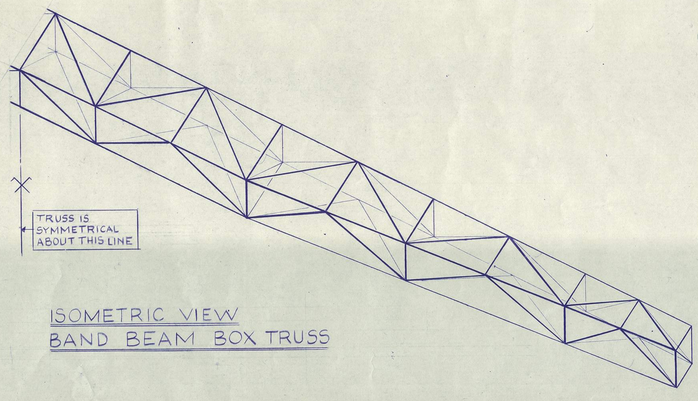

ISOMETRIC VIEW
BAND BEAM BOX TRUSS

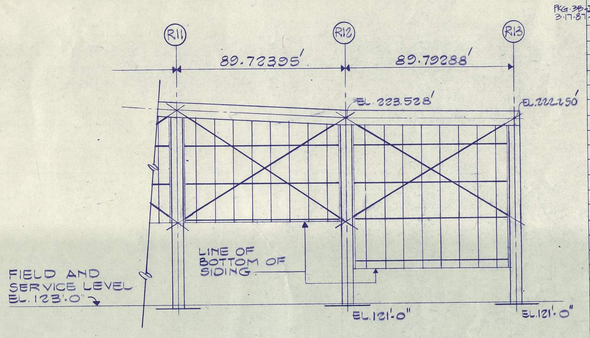

WIND BRACING SYSTEM - ELEVATION

NOTES-LEGEND

KKBNA/PC
STRUCTURAL, MECHANICAL, ELECTRICAL, PLUMBING ENGINEERS
14 Fifth Avenue
New York, New York 10011
212-242-9900

POST, BUCKLEY, SCHUH & JERNIGAN, INC.
CIVIL ENGINEERS, ENGINEERS AND PLANNERS
240 First Avenue South
St. Petersburg, Florida 33701
813-446-7275

THE JOINER-ROSE GROUP
ACOUSTICS
4527 Dorset Drive
Dallas, Texas 75234
214-392-7800

HELMUTH, OBATA & KASSABAUM, INC.
ARCHITECTS, PLANNERS, INTERIORS, GRAPHICS, ENGINEERING
323 WEST EIGHTH STREET
SUITE 200
KANSAS CITY, MISSOURI 64105
816-221-1576

101 SPORT

D C
A B
R1
KEY PLAN

THE STADIUM
One Booker Creek Place
St. Petersburg, Pinellas County, Florida

Approval Dates

	Owner	Owner Rep.	Contractor	Architect Consult
DD	9.10.87	9.10.87	9.10.87	9.10.87
CD	9.10.87	9.10.87	9.10.87	9.10.87

Pkg 3B 3.7-5

Project No. 4008-001

Drawn	Reviewed	Issued
		3-17-87

Revisions

No.	Description	Date
1	ASCO # 16	9.10.87

Category: Sub-Cat.: Sheet: 3.7C-1

STRUCTURAL ACOUSTICAL PLUMBING ELECTRICAL MECHANICAL OTHER NOTE FINISH WALL GRID TITLE LEVEL/QUADRANT OVERLAY DATE

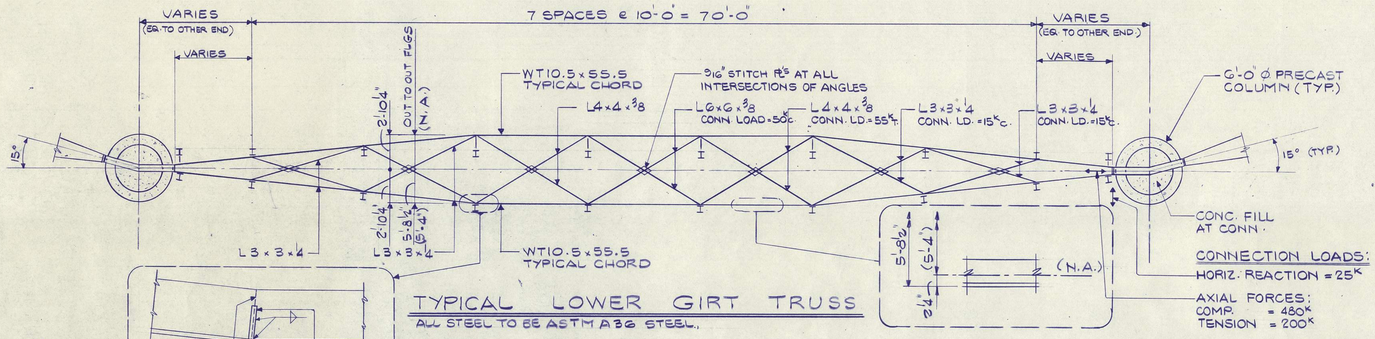

TYPICAL LOWER GIRT TRUSS

ALL STEEL TO BE ASTM A36 STEEL.

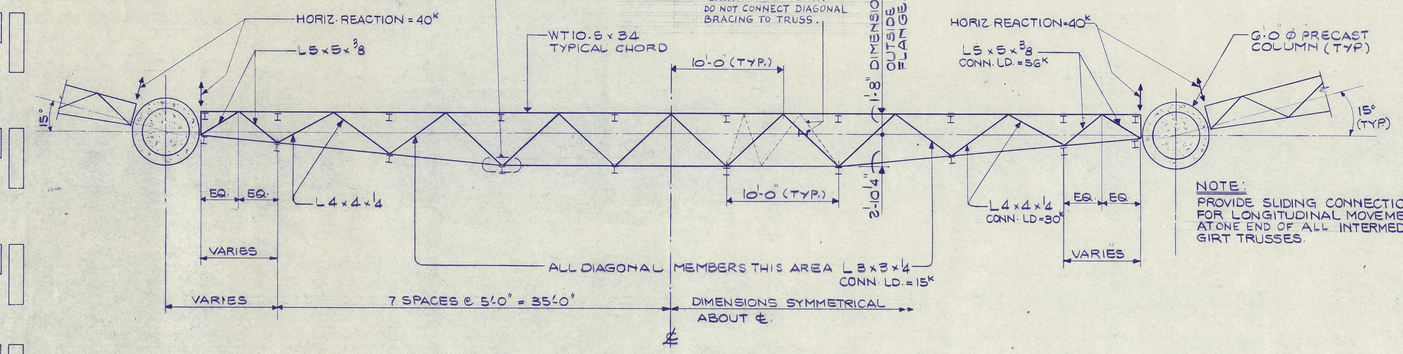

TYPICAL INTERMEDIATE GIRT TRUSS

ALL STEEL TO BE ASTM A36 STEEL.

NOTE:
PROVIDE SLIDING CONNECTIONS FOR LONGITUDINAL MOVEMENT AT ONE END OF ALL INTERMEDIATE GIRT TRUSSES.

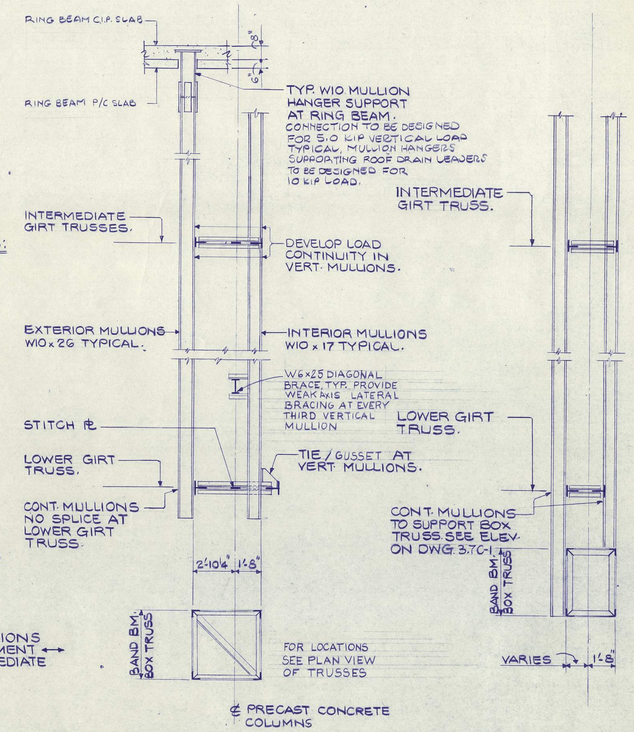

1 SECTION

2 SECTION 2

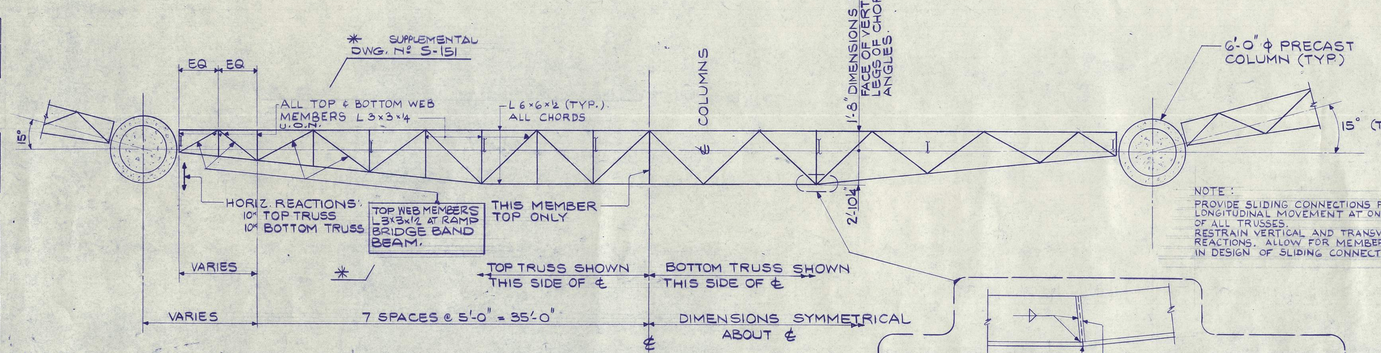

TOP & BOTTOM — PLAN VIEW

NOTE:
PROVIDE SLIDING CONNECTIONS FOR LONGITUDINAL MOVEMENT AT ONE END OF ALL TRUSSES. RESTRAIN VERTICAL AND TRANSVERSE REACTIONS. ALLOW FOR MEMBER ROTATION IN DESIGN OF SLIDING CONNECTION.

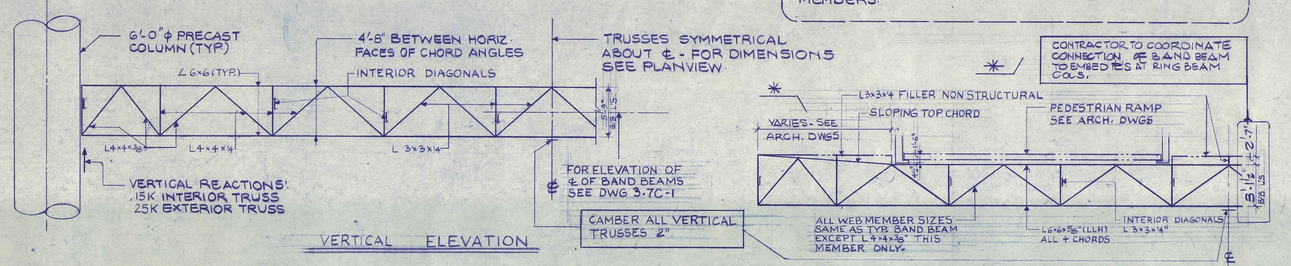

VERTICAL ELEVATION

BAND BEAM @ RAMPS - FRONT VIEW

TYPICAL HORIZONTAL BAND BEAM BOX TRUSSES

ALL STEEL TO BE ASTM A36 STEEL

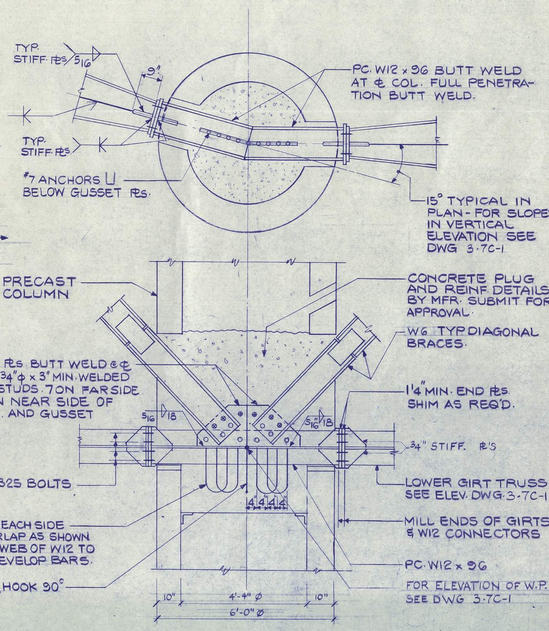

DETAIL AT CONNECTIONS OF LOWER GIRT TRUSSES AND 12E BRACES AT PRECAST COLUMNS.

NOTES-LEGEND

KKBNA/PC
STRUCTURAL, MECHANICAL, ELECTRICAL, PLUMBING
114 Fifth Avenue
New York, New York 10011
212-242-0900

POST, BUCKLEY, SCHUH & JERNIGAN, INC.
CIVIL, STRUCTURAL, ENVIRONMENTAL ENGINEERS AND PLANNERS
260 First Avenue South
St. Petersburg, Florida 33701
813-446-7275

THE JOHNER-ROSE GROUP
CONSULTANTS IN ACOUSTICS
4611 Lemmon Avenue
Dallas, Texas 75234
214-382-7800

HELLMUTH, OBATA & KASSABAUM, INC.
ARCHITECTURE, INTERIORS, PLANNING, GRAPHICS, ENGINEERING
323 WEST EIGHTH STREET
SUITE 600
KANSAS CITY, MISSOURI 64105
816-221-1076

101K SPORT

D C A B R1

KEY PLAN

THE STADIUM
One Booker Creek Place
St. Petersburg, Pinellas County, Florida

Approval Dates	Owner	Owner Rep.	Contractor	Architect Consult.
DD				
CD	9-10-87	9-10-87	9-10-87	9-10-87
1	9-10-87	9-10-87	9-10-87	9-10-87

Project No. 4008-001

Drawn	Reviewed	Issued
		3-17-87

Revisions

No.	Description	Date
1	ASCO # 10	9-10-87

Category	Sub-Cat.	Sheet
		3.7C-2

WIND BRACING SYSTEM - SECTIONS & DETAILS

STRUCTURAL ACOUSTICAL PLUMBING ELECTRICAL MECHANICAL OTHER NOTE FINISH WALL GRID TITLE T OVERLAY DATE LEVEL/QUADRANT

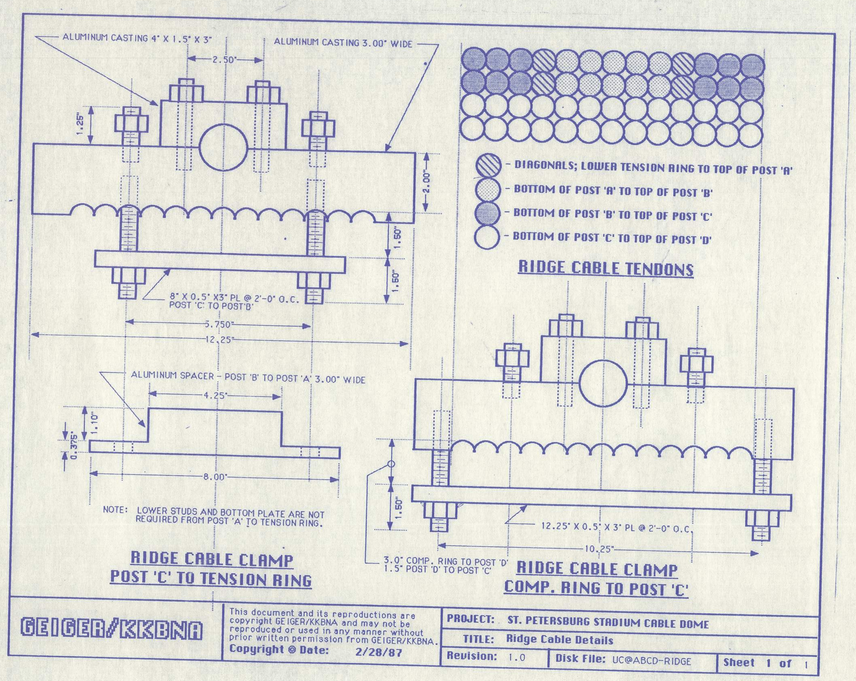

GEIGER/KKBNA

This document and its reproductions are copyright GEIGER/KKBNA and may not be reproduced or used in any manner without prior written permission from GEIGER/KKBNA.
Copyright © Date: 2/28/87

PROJECT: ST. PETERSBURG STADIUM CABLE DOME
TITLE: Ridge Cable Details
Revision: 1.0 | Disk File: UC@ABCD-RIDGE | Sheet 1 of 1

ACOUSTICAL
STRUCTURAL
PLUMBING
ELECTRICAL
MECHANICAL
OTHER
NOTE
FINISH
WALL
GRID
TITLE T
OVERLAY DATE
LEVEL/QUADRANT

NOTES-LEGEND

KKBNA/PC ENGINEERS
STRUCTURAL, MECHANICAL, ELECTRICAL, PLUMBING
711 Fifth Avenue
New York, New York 10017 212-242-0900

POST, BUCKLEY, SCHUH & JERNIGAN, INC.
CONSULTING CIVIL ENGINEERS AND PLANNERS
286 Pine Avenue South
St. Petersburg, Florida 33701 813-446-7276

THE JONER-ROSE GROUP
CONSULTANTS IN ACOUSTICS
4121 Centerville Way
Dallas, Texas 75234 214-392-7800

HELLMUTH, OBATA & KASSABAUM, INC.
ARCHITECTURE, INTERIORS, PLANNING, GRAPHIC DESIGN
323 WEST EIGHTH STREET
SUITE 200
KANSAS CITY, MISSOURI 64105
816-221-1876

SPORT

D C
A B
R1
KEY PLAN

THE STADIUM
One Booker Creek Place
St. Petersburg, Pinellas County, Florida

Approval Dates

	Owner	Owner Rep	Construct. Manager	Architect Consult
DD	11-21-86	11-21-86	11-21-86	11-21-86
CD	3-17-87	3-17-87	3-17-87	3-17-87
1				
2				
3				
4				
5				
6				
7				
8				
9				
10				
11				
12				
13				
14				
15				
16				
17				
18				

Project No. 4008-001/9541.01

Drawn	Reviewed	Issued
		3-17-87

Revisions

No.	Description	Date
1		
2		
3		
4		
5		
6		
7		
8		
9		
10		
11		
12		
13		
14		
15		
16		
17		
18		

Category Sub-Cat. Sheet
3.8C-1

RECORD SET
OCT 30 1989
DATE

RIDGE CABLE FABRIC CLAMP DETAILS

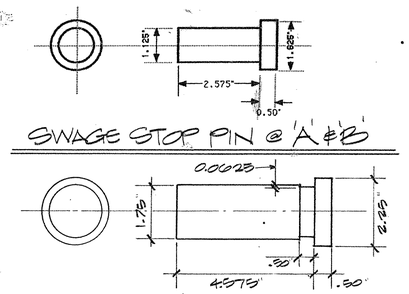

SWAGE STOP PIN @ 'A' & 'B'

SWAGE STOP PIN @ 'C' & 'D'

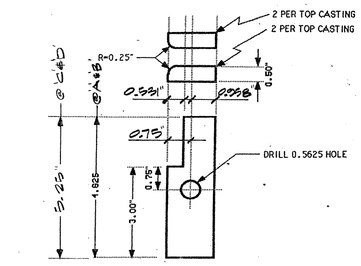

PIN CLAMPS

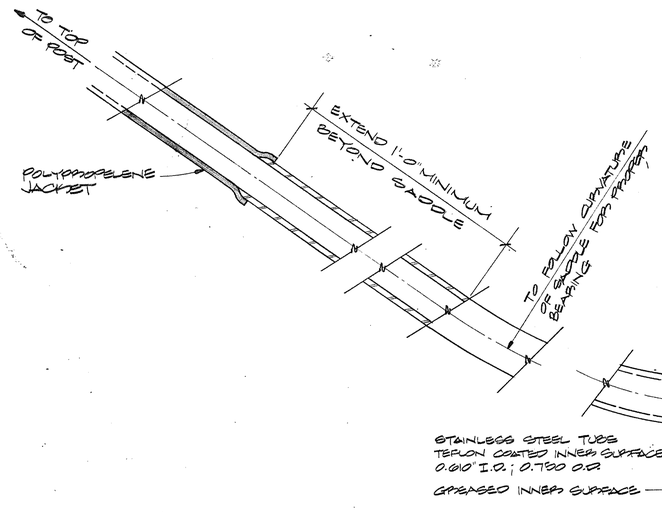

STEEL JACKET DETAIL FOR STRANDS AT LOWER CASTING OF POST 'D'

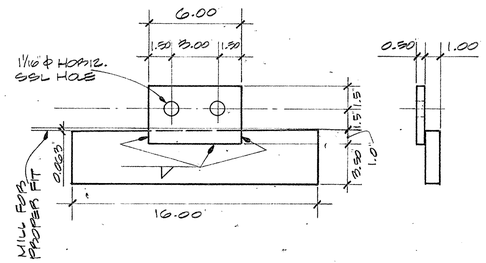

CLOSURE PL AT LOWER CASTINGS - ALL POSTS

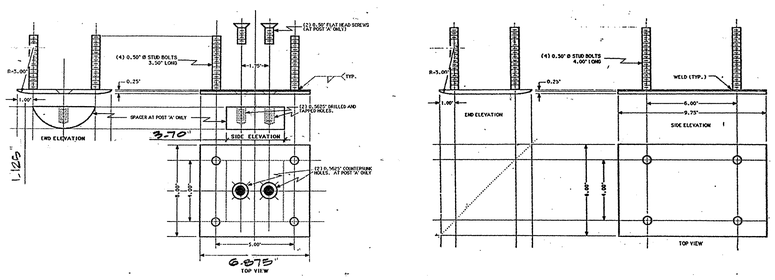

AT POSTS A & B

AT POSTS C & D

CLOSURE PL'S AT UPPER CASTINGS

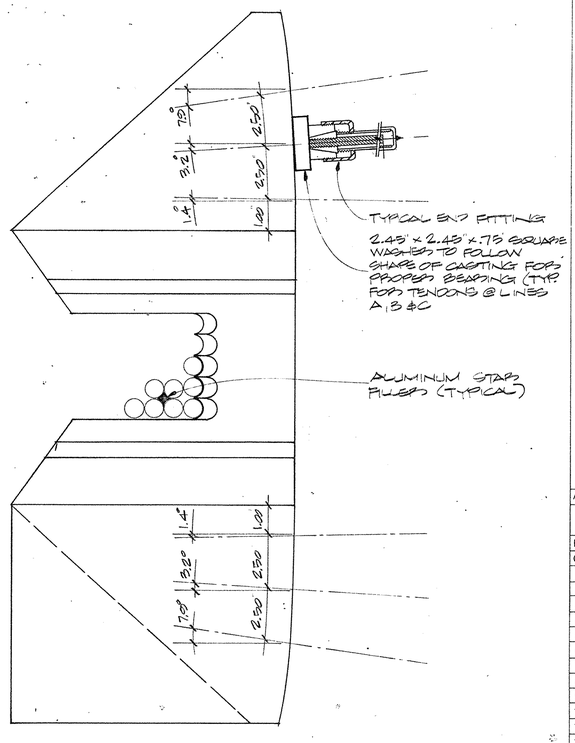

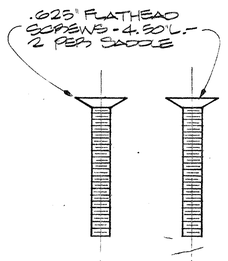

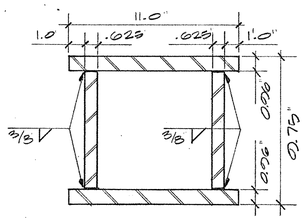

FILLER TUBE AT LOWER CASTING B & C

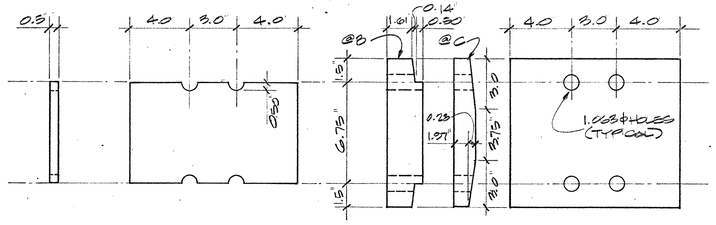

FILLER PL AT POST - 'A'

POST B & C TUBE BRG. PLATE DETAILS

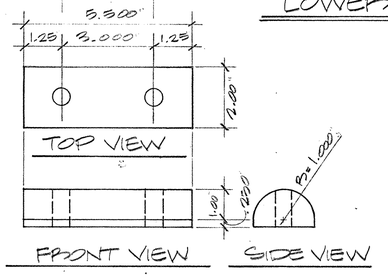

WIRE ROPE SADDLE - 2 FOR POST 'A' ONLY

COLUMN	β°
P1	-6.253°
P2, 24	-6.04°
P3, 23	-5.41°
P4, 22	-4.42°
P5, 21	-3.12°
P6, 20	-1.62°
P7, 19	0
P8, 18	1.62°
P9, 17	3.12
P10, 16	4.42
P11, 15	5.41
P12, 14	6.04
P13	6.253

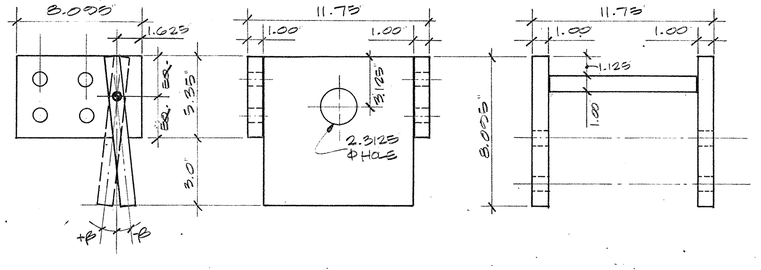

RIGGING CONNECTION @ LOWER CASTING

NOTES-LEGEND

KKBNA/PC — STRUCTURAL, MECHANICAL, ELECTRICAL, PLUMBING ENGINEERS
711 Fifth Avenue, New York, New York 10011, 212-242-0900

POST, BUCKLEY, SCHUH & JERNIGAN, INC. — CONSULTING CIVIL ENGINEERS AND PLANNERS
400 First Avenue North, Suite 800, St. Petersburg, Florida 33701, 813-446-7275

HELLMUTH, OBATA & KASSABAUM, INC. — ARCHITECTURE, INTERIORS, PLANNING, GRAPHICS, ENGINEERING
323 WEST EIGHTH STREET, SUITE 200, KANSAS CITY, MISSOURI 64105, 816-221-1576

THE JONNER-ROSE GROUP — CONSULTANTS IN ACOUSTICS
4105 Centurion Way, Dallas, Texas 75244, 214-392-7800

1st SPORT

CONSTRUCTION PACKAGE 3B- PART 2
PRECAST STADIUM STRUCTURE & ROOF STRUCTURE
SCOPE APPROVAL 3/17/87

KEY PLAN (D C / A B / R1)

THE STADIUM
One Booker Creek Place
St. Petersburg, Pinellas County, Florida

Approval Dates	Owner	Owner Rep.	Construct. Manager	Architect Consult.
DD	11-21-86	11-21-86	11-21-86	11-21-86
CD				
1				
2				
3				
4				
5				
6				
7				
8				
9				
10				
11				
12				
13				
14				
15				
16				
17				
18				

Project No. 4008-001/9541.01

Drawn	Reviewed	Issued

Revisions DD 3-26-86

No.	Description	Date
1		
2		
3		
4		
5		
6		
7		
8		
9		
10		
11		
12		
13		
14		
15		
16		
17		
18		

Category — Sub-Cat. — Sheet: 3.8D-1

DETAILS OF CASTINGS

ACOUSTICAL | STRUCTURAL | PLUMBING | ELECTRICAL | MECHANICAL | OTHER | NOTE | FINISH | WALL | GRID | TITLE T | LEVEL/QUADRANT | OVERLAY DATE

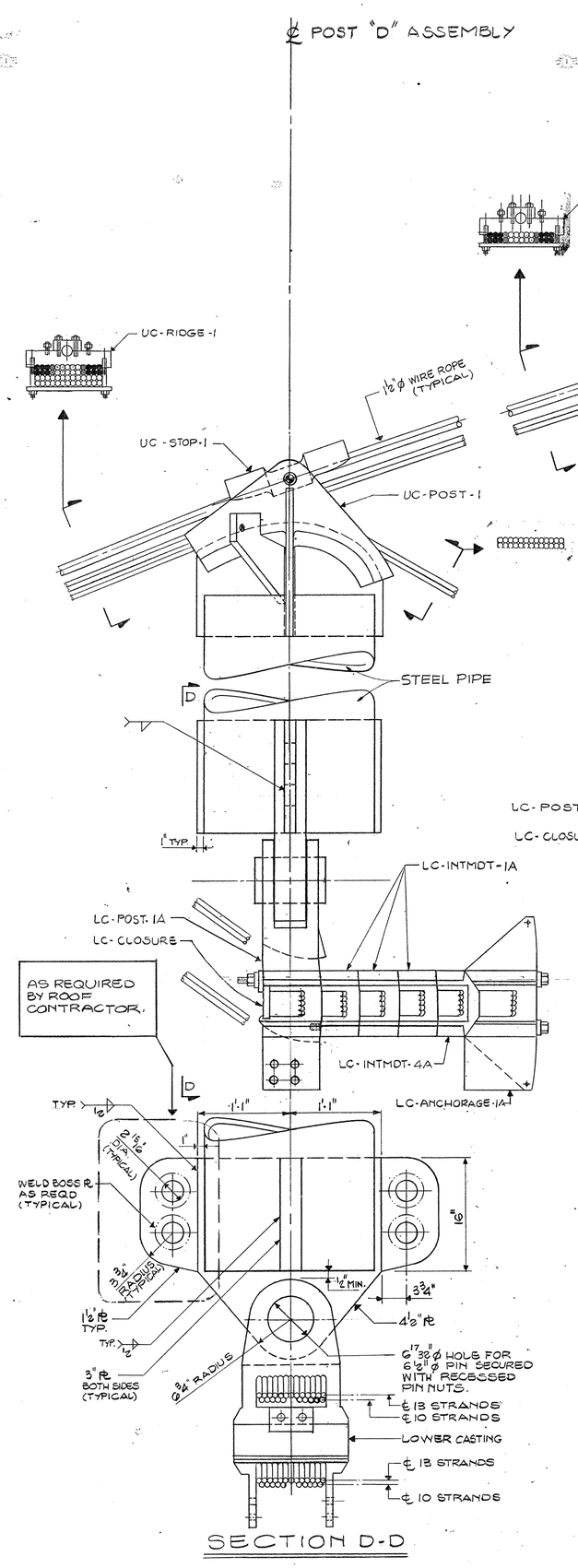

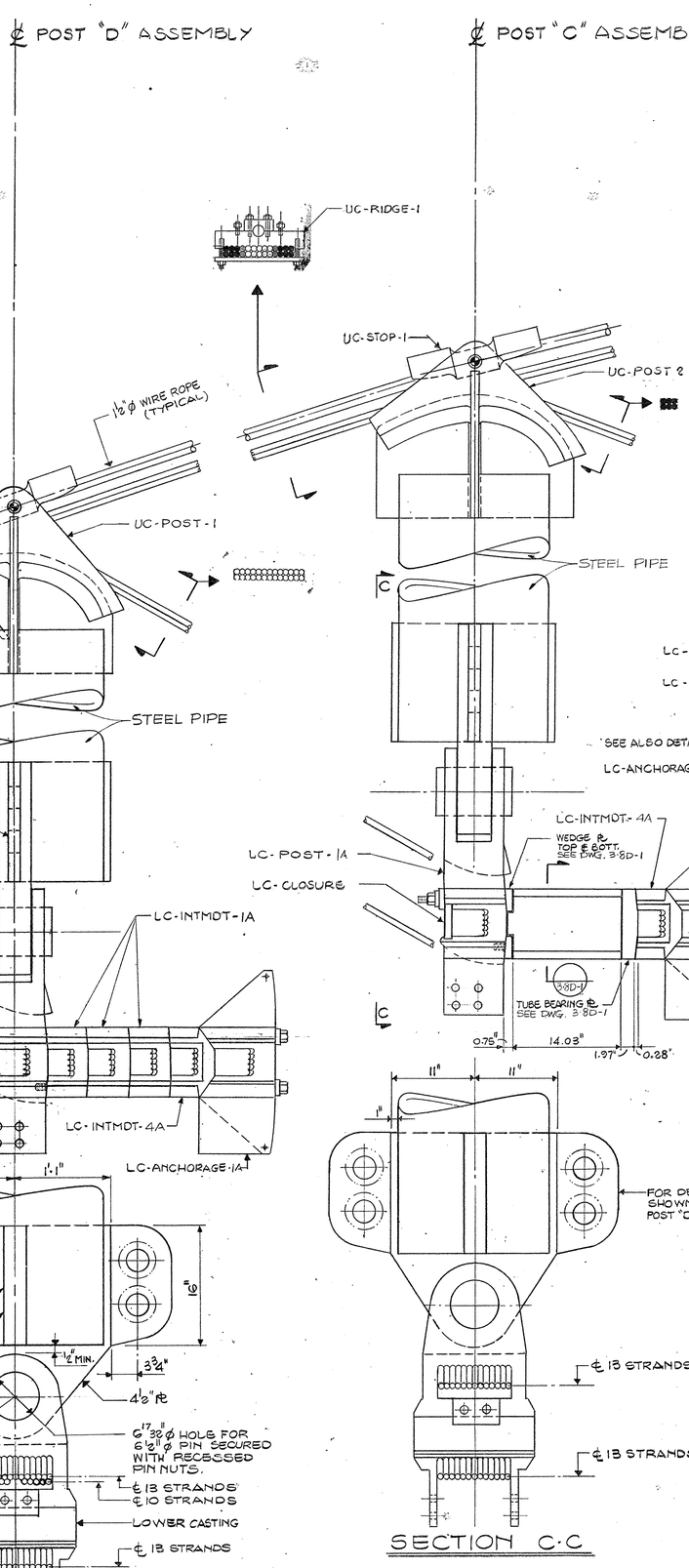

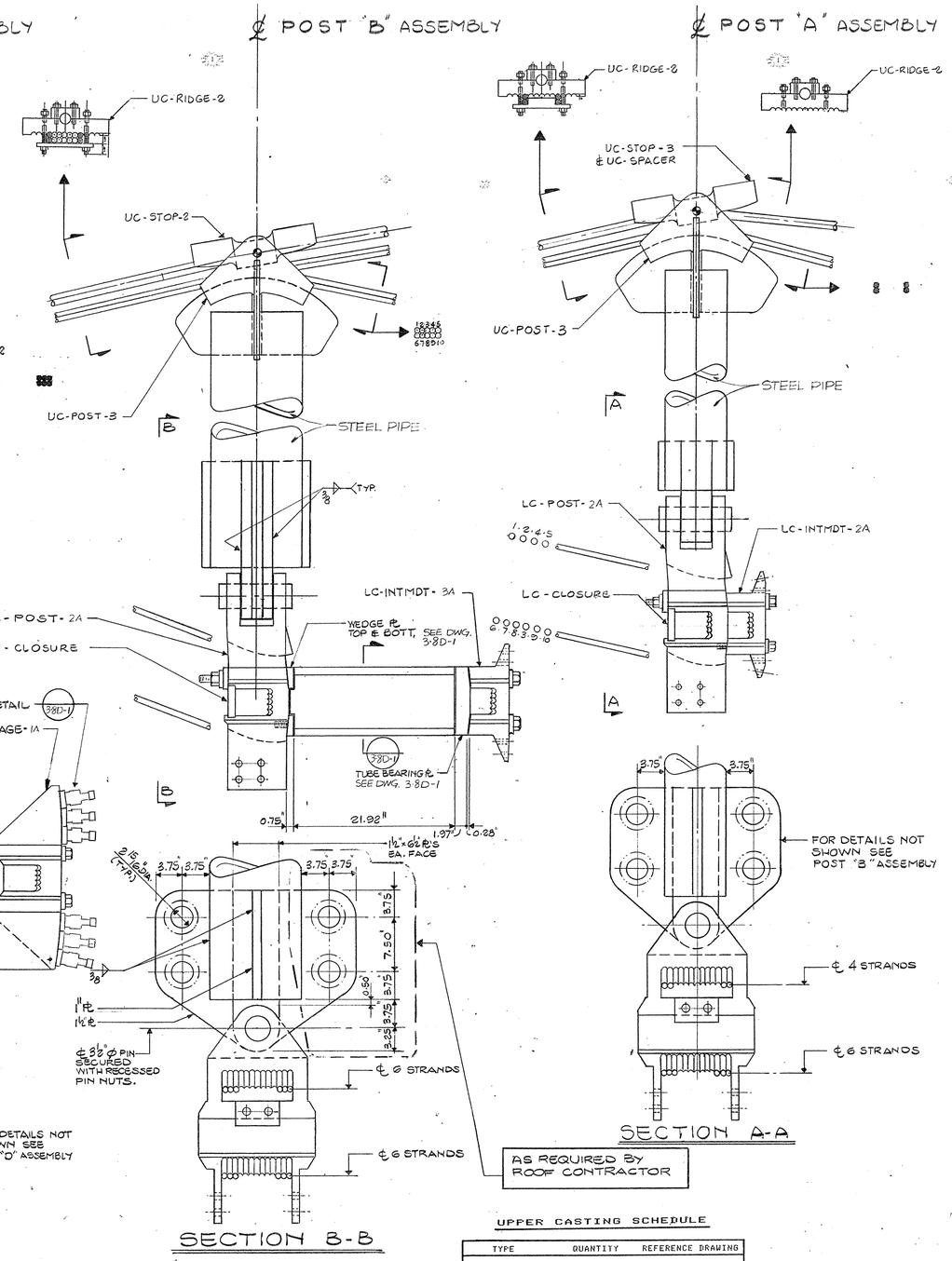

UPPER CASTING SCHEDULE

TYPE	QUANTITY	REFERENCE DRAWING
UC-POST-1	24	3.8B-2
UC-POST-2	24	3.8B-2
UC-POST-3	48	3.8B-1
UC-STOP-1	48	3.8B-2
UC-STOP-2	24	3.8B-1
UC-STOP-3	24	3.8B-1

LOWER CASTING SCHEDULE

TYPE	QUANTITY	REFERENCE DRAWING
LC-POST-1A	42	3.8A-1
LC-POST-2A	43	3.8A-2
LC-POST-1B	2	3.8A-3
LC-POST-2B	2	3.8A-4
LC-POST-1C	2	3.8A-5
LC-POST-2C	2	3.8A-6
LC-POST-1D	2	3.8A-7
LC-POST-2D	1	3.8A-8
LC-CLOSURE	96	3.8A-1
LC-INTMDT-1A	66	3.8A-9
LC-INTMDT-2A	22	3.8A-10
LC-INTMDT-3A	22	3.8A-10
LC-INTMDT-4A	44	3.8A-9
LC-INTMDT-1B	3	3.8A-11
LC-INTMDT-2B	1	3.8A-12
LC-INTMDT-3B	1	3.8A-12
LC-INTMDT-4B	2	3.8A-11
LC-INTMDT-1C	3	3.8A-13
LC-INTMDT-2C	1	3.8A-14
LC-INTMDT-3C	1	3.8A-14
LC-INTMDT-4C	2	3.8A-13
LC-ANCHORAGE-1A	42	3.8A-15
LC-ANCHORAGE-1B	2	3.8A-16
LC-ANCHORAGE-1C	2	3.8A-17
LC-ANCHORAGE-1D	2	3.8A-18

GENERAL NOTES

A. ERECTOR SHALL SUPPORT CENTER RING AT ELEVATION 260' ± DURING ERECTION OF OF THE CABLES .

NOTES-LEGEND

CONSTRUCTION PACKAGE 3B- PART 2
PRECAST STADIUM STRUCTURE & ROOF STRUCTURE
SCOPE APPROVAL 3/17/87

TYPICAL CABLE TRUSS ASSEMBLY DETAI

KKGNA/PC
STRUCTURAL, MECHANICAL, ELECTRICAL, PLUMBING ENGINEERS
711 Fifth Avenue
New York, New York 10017
212-242-0900

POST, BUCKLEY, SCHUH & JERNIGAN, INC.
CONSULTING CIVIL ENGINEERS AND PLANNERS
215 East Bronough Street
Post Office Box 1076
Tallahassee, Florida 32301
813-448-7276

THE JONES-ROSE GROUP
LANDSCAPE ARCHITECTS
4121 Centurion Way
Dallas, Texas 75234
214-392-7500

HELLMUTH, OBATA & KASSABAUM, INC.
ARCHITECTURE, INTERIORS, PLANNING
ONE MEMORIAL CITY PLAZA
3535 WEST EIGHTH STREET
SUITE 700
SAINT LOUIS, MISSOURI 63105
816-221-1070

SPORT

KEY PLAN

THE STADIUM
One Booker Creek Place
St. Petersburg, Pinellas County, Florida

Approval Dates	Owner	Owner Rep.	Construct Manager	Architect Consult.
DD	11-21-86	11-21-86	11-21-86	11-21-86
CD				

Project No. 4008-0017 9541.01

Drawn	Reviewed	Issued

Revisions DD 3-26-86

No.	Description	Date
1		
2		
3		
4		
5		
6		
7		
8		
9		
10		
11		
12		
13		
14		
15		
16		
17		
18		

Category Sub-Cat. Sheet

3.8E-1

STRUCTURAL ACOUSTICAL PLUMBING ELECTRICAL MECHANICAL OTHER NOTE FINISH WALL GRID TITLE LEVEL/QUADRANT OVERLAY DATE

℄ POST "D" ASSEMBLY

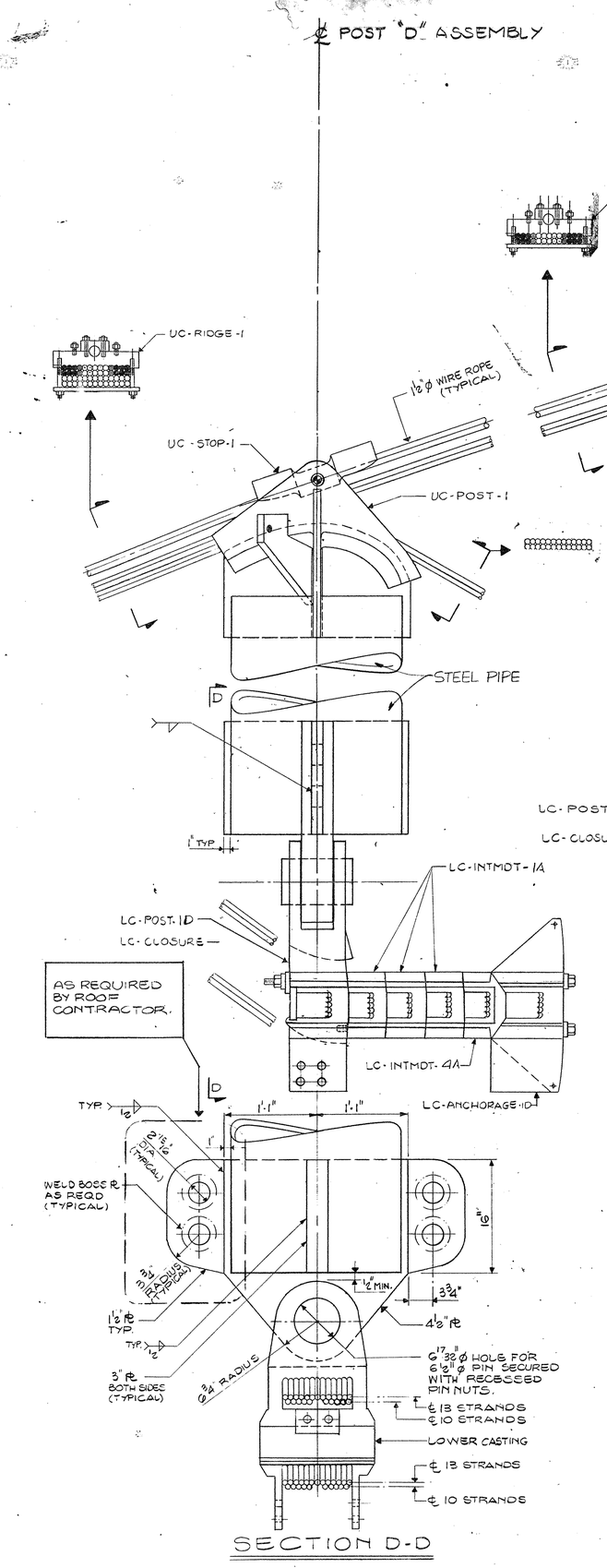

SECTION D-D

℄ POST "C" ASSEMBLY

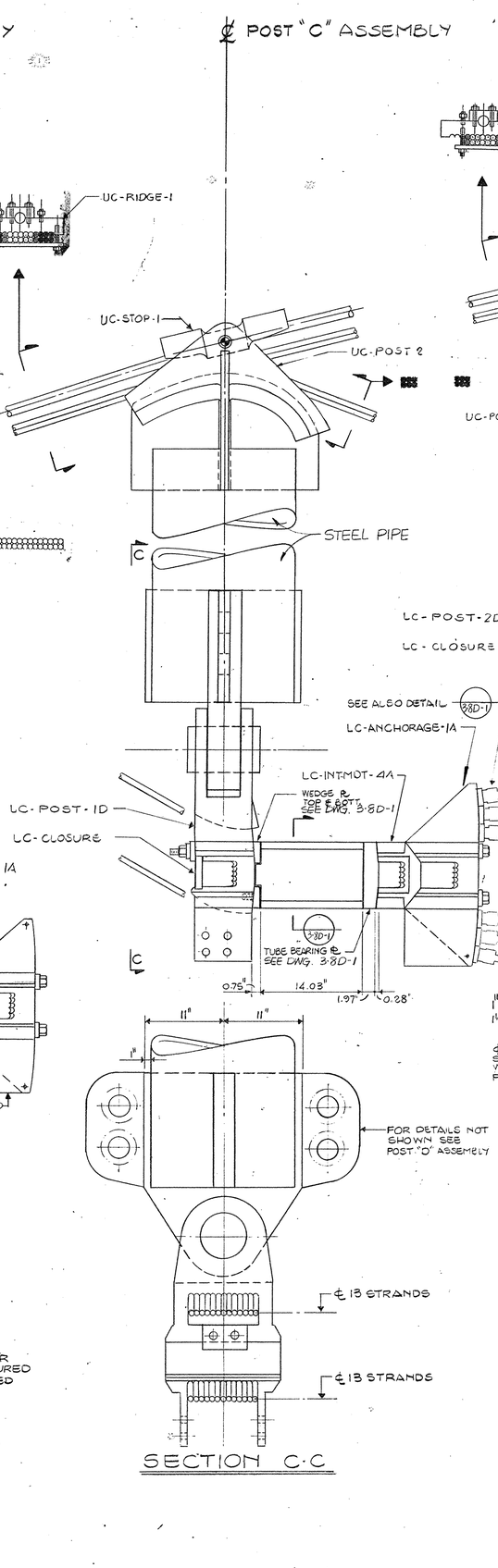

SECTION C-C

℄ POST "B" ASSEMBLY

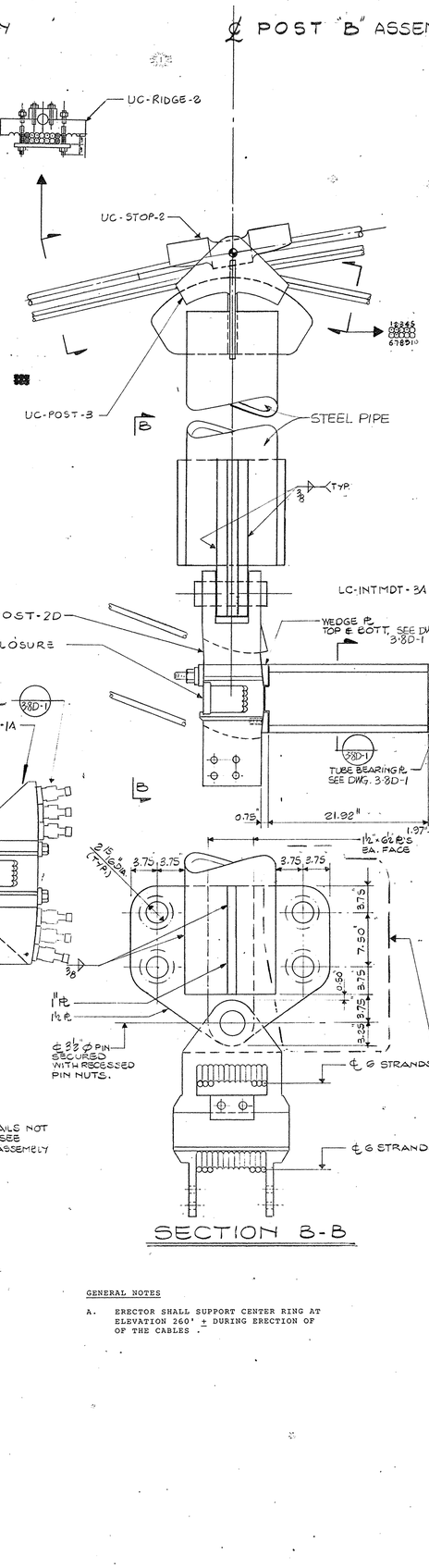

SECTION B-B

℄ POST "A" ASSEMBLY

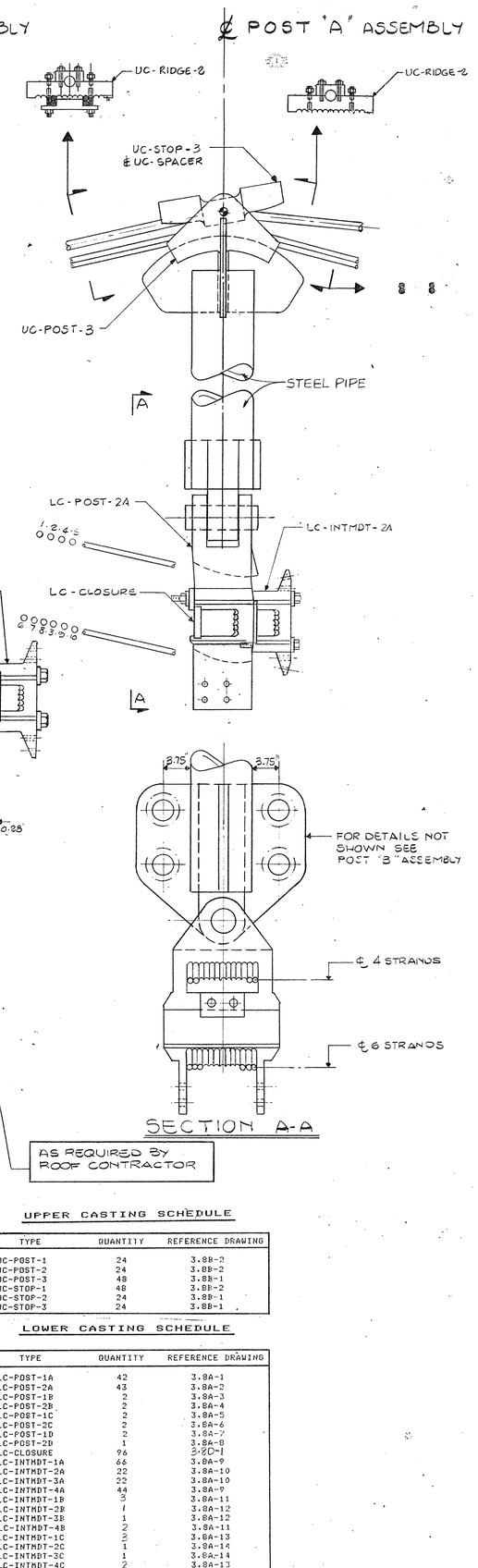

SECTION A-A

AS REQUIRED BY ROOF CONTRACTOR

UPPER CASTING SCHEDULE

TYPE	QUANTITY	REFERENCE DRAWING
UC-POST-1	24	3.8B-2
UC-POST-2	24	3.8B-2
UC-POST-3	48	3.8B-1
UC-STOP-1	48	3.8B-2
UC-STOP-2	24	3.8B-1
UC-STOP-3	24	3.8B-1

LOWER CASTING SCHEDULE

TYPE	QUANTITY	REFERENCE DRAWING
LC-POST-1A	42	3.8A-1
LC-POST-2A	43	3.8A-2
LC-POST-1B	2	3.8A-3
LC-POST-2B	2	3.8A-4
LC-POST-1C	2	3.8A-5
LC-POST-2C	2	3.8A-6
LC-POST-1D	2	3.8A-7
LC-POST-2D	1	3.8A-8
LC-CLOSURE	96	3.8D-1
LC-INTMDT-1A	66	3.8A-9
LC-INTMDT-2A	22	3.8A-10
LC-INTMDT-3A	22	3.8A-10
LC-INTMDT-4A	44	3.8A-9
LC-INTMDT-1B	3	3.8A-11
LC-INTMDT-2B	1	3.8A-12
LC-INTMDT-3B	1	3.8A-12
LC-INTMDT-4B	2	3.8A-11
LC-INTMDT-1C	3	3.8A-13
LC-INTMDT-2C	1	3.8A-14
LC-INTMDT-3C	1	3.8A-14
LC-INTMDT-4C	2	3.8A-13
LC-ANCHORAGE-1A	42	3.8A-15
LC-ANCHORAGE-1B	2	3.8A-16
LC-ANCHORAGE-1C	2	3.8A-17
LC-ANCHORAGE-1D	2	3.8A-18

GENERAL NOTES

A. ERECTOR SHALL SUPPORT CENTER RING AT ELEVATION 260' ± DURING ERECTION OF OF THE CABLES .

NOTES-LEGEND

CONSTRUCTION PACKAGE 3B- PART 2
PRECAST STADIUM STRUCTURE & ROOF STRUCTURE
SCOPE APPROVAL 3/17/87

KKBNA/PC
STRUCTURAL, MECHANICAL, ELECTRICAL, PLUMBING ENGINEERS
199 Fifth Avenue
New York, New York 10011 212-242-0990

POST, BUCKLEY, SCHUH & JERNIGAN, INC.
CONSULTING CIVIL ENGINEERS AND PLANNERS
One Progress Plaza
St. Petersburg, Florida 33701 813-446-7276

THE JONES-ROSE GROUP
CONSULTANTS IN ACOUSTICS
4701 Commerce Way
Dallas, Texas 75234 214-392-7300

HELLMUTH, OBATA & KASSABAUM, INC.
ARCHITECTURE, INTERIORS, PLANNING
ENGINEERING, MANAGEMENT
323 WEST EIGHTH STREET
SUITE E 90
KANSAS CITY, MISSOURI 64105
816-221-1870

hlk SPORT

KEY PLAN

THE STADIUM
One Booker Creek Place
St. Petersburg, Pinellas County, Florida

Approval Dates	Owner	Owner Rep.	Construct. Manager	Architect Consult.
DD	11-21-86	11-21-86	11-21-86	11-21-86
CD				

Project No. 4008-001/9541.01

Drawn	Reviewed	Issued

Revisions DD 3-26-86

No.	Description	Date
1		
2		
3		
4		
5		
6		
7		
8		
9		
10		
11		
12		
13		
14		
15		
16		
17		
18		

Category — Sub-Cat. — Sheet

3.8E-2

CABLE TRUSS AT COLUMN LINE R1 ASSEMBLY DETAILS

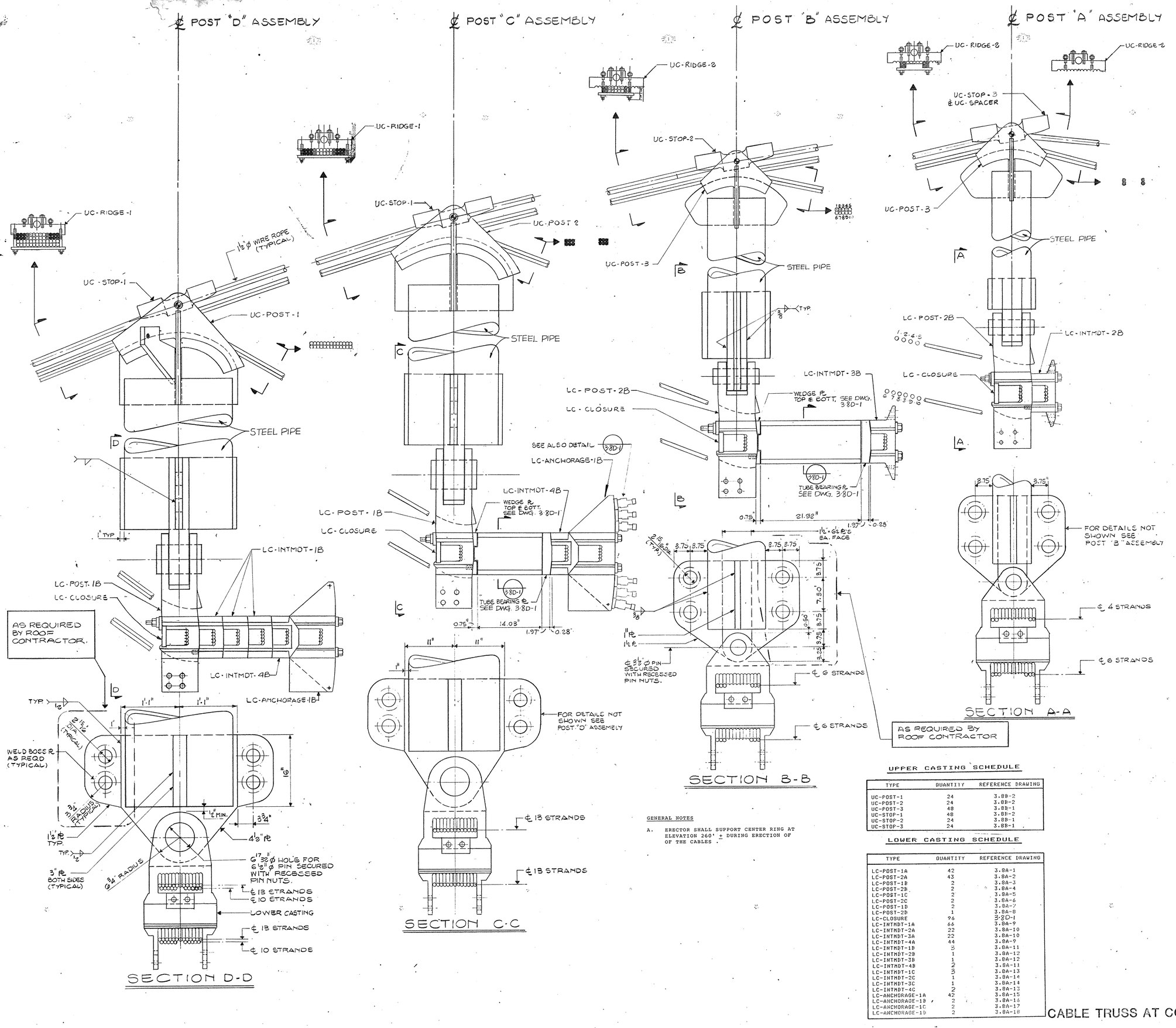

GENERAL NOTES

A. ERECTOR SHALL SUPPORT CENTER RING AT ELEVATION 260' ± DURING ERECTION OF OF THE CABLES .

UPPER CASTING SCHEDULE

TYPE	QUANTITY	REFERENCE DRAWING
UC-POST-1	24	3.8B-2
UC-POST-2	24	3.8B-2
UC-POST-3	48	3.8B-1
UC-STOP-1	48	3.8B-2
UC-STOP-2	24	3.8B-1
UC-STOP-3	24	3.8B-1

LOWER CASTING SCHEDULE

TYPE	QUANTITY	REFERENCE DRAWING
LC-POST-1A	42	3.8A-1
LC-POST-2A	43	3.8A-2
LC-POST-1B	2	3.8A-3
LC-POST-2B	2	3.8A-4
LC-POST-1C	2	3.8A-5
LC-POST-2C	2	3.8A-6
LC-POST-1D	2	3.8A-7
LC-POST-2D	1	3.8A-8
LC-CLOSURE	96	3.8D-1
LC-INTMDT-1A	66	3.8A-9
LC-INTMDT-2A	22	3.8A-10
LC-INTMDT-3A	22	3.8A-10
LC-INTMDT-4A	44	3.8A-9
LC-INTMDT-1B	2	3.8A-11
LC-INTMDT-2B	1	3.8A-12
LC-INTMDT-3B	1	3.8A-12
LC-INTMDT-4B	2	3.8A-11
LC-INTMDT-1C	2	3.8A-13
LC-INTMDT-2C	1	3.8A-14
LC-INTMDT-3C	1	3.8A-14
LC-INTMDT-4C	2	3.8A-13
LC-ANCHORAGE-1A	42	3.8A-15
LC-ANCHORAGE-1B	2	3.8A-16
LC-ANCHORAGE-1C	2	3.8A-17
LC-ANCHORAGE-1D	2	3.8A-18

CABLE TRUSS AT COLUMN LINE R7 ASSEMBLY DETAILS

NOTES-LEGEND

CONSTRUCTION PACKAGE 3B- PART 2
PRECAST STADIUM STRUCTURE & ROOF STRUCTURE
SCOPE APPROVAL 3/17/87

KKBNA/PC
STRUCTURAL, MECHANICAL, ELECTRICAL, PLUMBING ENGINEERS
One Park Place, Suite 1011
Fort Worth, Texas 76102 817-335-8880

POST, BUCKLEY, SCHUH & JERNIGAN, INC.
CIVIL, STRUCTURAL, ENVIRONMENTAL AND PLUMBING ENGINEERS
250 Pine Avenue, North
St. Petersburg, Florida 33701 813-446-7278

HELLMUTH, OBATA & KASSABAUM, INC.
ARCHITECTURE, PLANNING, INTERIORS, & GRAPHICS, ENGINEERING
323 WEST EIGHTH STREET
SUITE 200
KANSAS CITY, MISSOURI 64105
816-221-1876

THE JOINER-ROSE GROUP
CONSULTANTS IN ACOUSTICS
Dallas, Texas 75234 214-392-7400

SPORT

KEY PLAN

THE STADIUM
One Booker Creek Place
St. Petersburg, Pinellas County, Florida

Approval Dates	Owner	Owner Rep.	Construct. Manager	Architect Consult.
DD	11-21-86	11-21-86	11-21-86	11-21-86
CD				

Project No. 4008-001 9541.01

Drawn	Reviewed	Issued

Revisions DD 3-26-86

No.	Description	Date
1		
2		
3		
4		
5		
6		
7		
8		
9		
10		
11		
12		
13		
14		
15		
16		
17		
18		

Category Sub-Cat. Sheet
3.8E-3

STRUCTURAL ACOUSTICAL PLUMBING ELECTRICAL MECHANICAL OTHER NOTE FINISH WALL GRID TITLE LEVEL/QUADRANT OVERLAY DATE

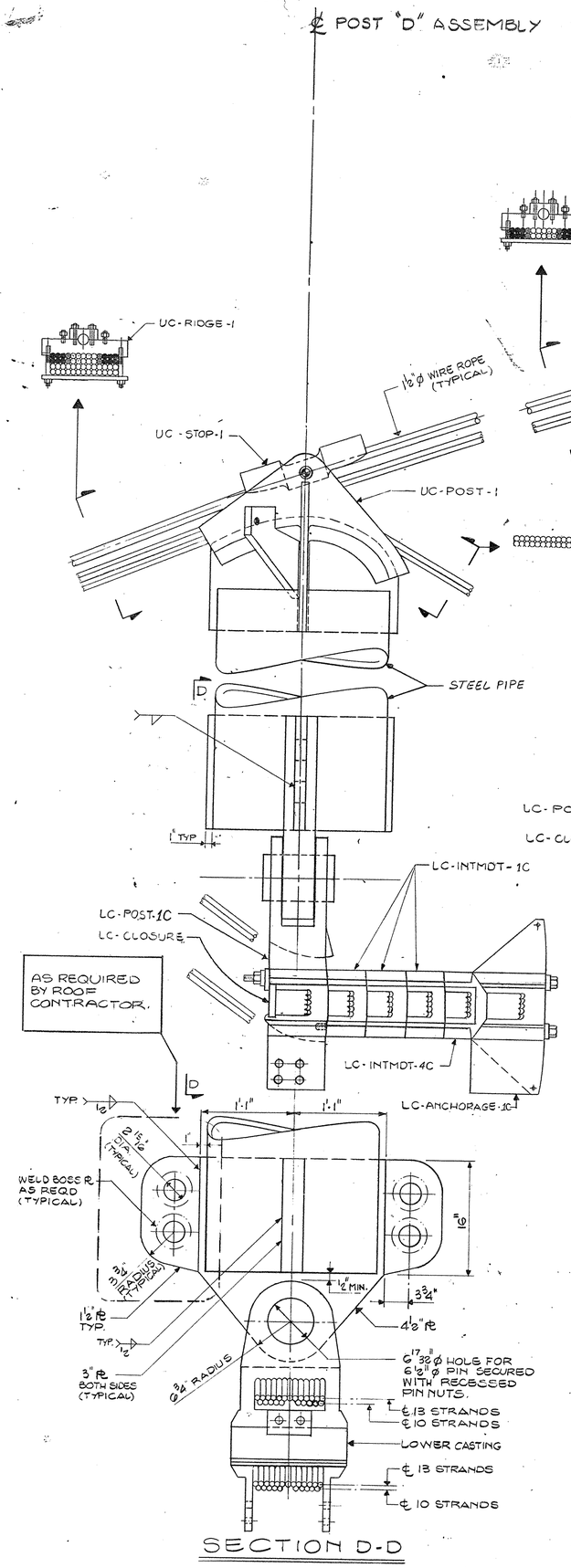

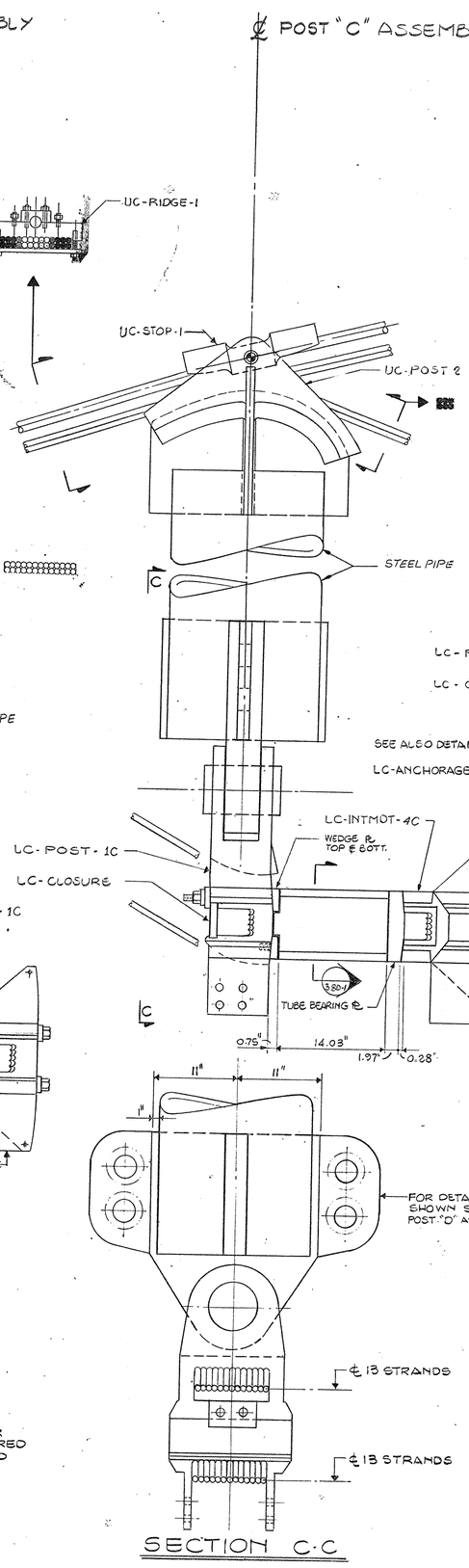

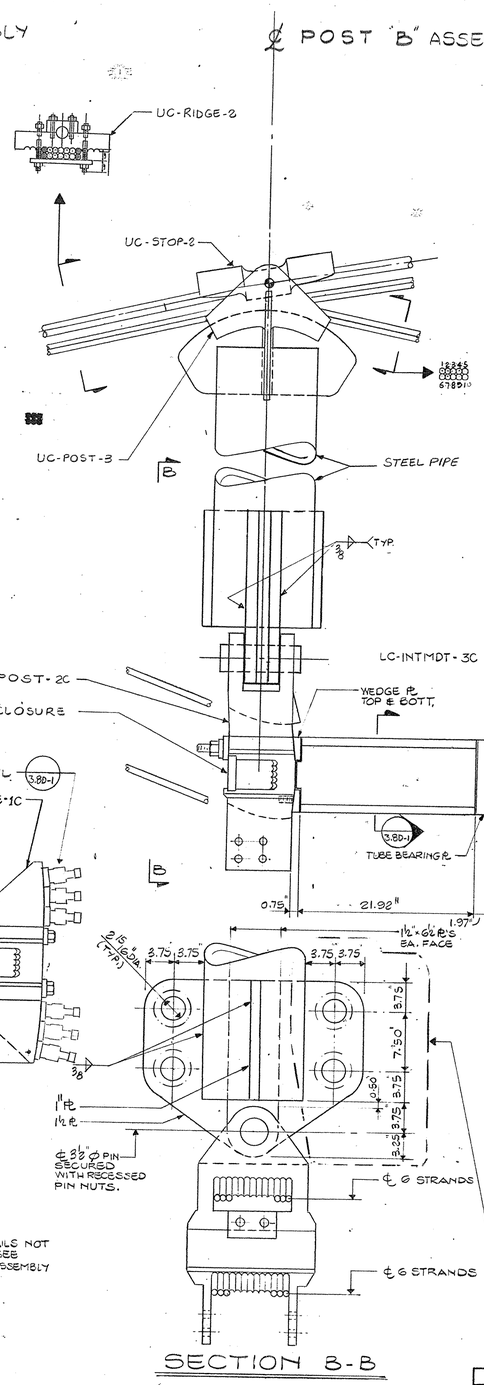

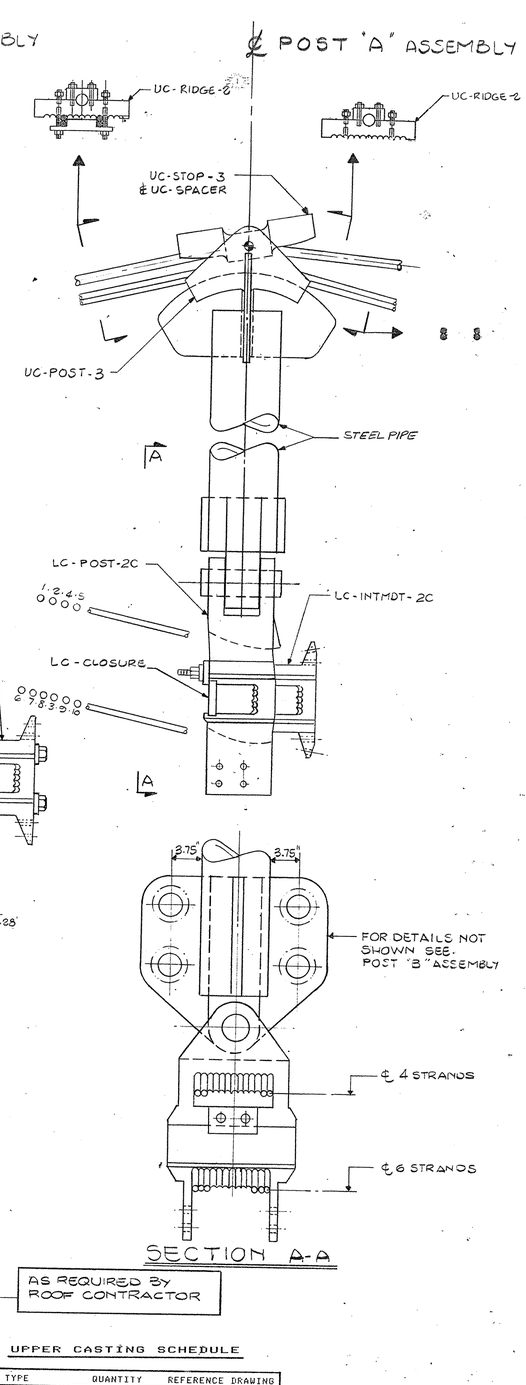

GENERAL NOTES

A. ERECTOR SHALL SUPPORT CENTER RING AT ELEVATION 260' ± DURING ERECTION OF OF THE CABLES .

UPPER CASTING SCHEDULE

TYPE	QUANTITY	REFERENCE DRAWING
UC-POST-1	24	3.8B-2
UC-POST-2	24	3.8B-2
UC-POST-3	48	3.8B-1
UC-STOP-1	48	3.8B-2
UC-STOP-2	24	3.8B-1
UC-STOP-3	24	3.8B-1

LOWER CASTING SCHEDULE

TYPE	QUANTITY	REFERENCE DRAWING
LC-POST-1A	42	3.8A-1
LC-POST-2A	43	3.8A-2
LC-POST-1B	2	3.8A-3
LC-POST-2B	2	3.8A-4
LC-POST-1C	2	3.8A-5
LC-POST-2C	2	3.8A-6
LC-POST-1D	2	3.8A-7
LC-POST-2D	1	3.8A-8
LC-CLOSURE	96	3.8D-1
LC-INTMDT-1A	66	3.8A-9
LC-INTMDT-2A	22	3.8A-10
LC-INTMDT-3A	22	3.8A-10
LC-INTMDT-4A	44	3.8A-9
LC-INTMDT-1B	3	3.8A-11
LC-INTMDT-2B	1	3.8A-12
LC-INTMDT-3B	1	3.8A-12
LC-INTMDT-4B	2	3.8A-11
LC-INTMDT-1C	5	3.8A-13
LC-INTMDT-2C	1	3.8A-14
LC-INTMDT-3C	1	3.8A-14
LC-INTMDT-4C	2	3.8A-13
LC-ANCHORAGE-1A	42	3.8A-15
LC-ANCHORAGE-1B	2	3.8A-16
LC-ANCHORAGE-1C	2	3.8A-17
LC-ANCHORAGE-1D	2	3.8A-18

NOTES-LEGEND

CONSTRUCTION PACKAGE 3B- PART 2
PRECAST STADIUM STRUCTURE & ROOF STRUCTURE
SCOPE APPROVAL 3/17/87

KKNA/PC
STRUCTURAL, MECHANICAL, ELECTRICAL, PLUMBING ENGINEERS
99 Hudson Street, 5th Floor, New York, New York 10013 212-242-2980

POST, BUCKLEY, SCHUH & JERNIGAN, INC.
CONSULTING CIVIL ENGINEERS AND PLANNERS
One Progress Plaza, Suite 1000, St. Petersburg, Florida 33701 813-446-7276

THE JONER-ROSE GROUP
ACOUSTICAL CONSULTANTS
4924 Cambridge Way, Dallas, Texas 75234 214-352-7800

HELLMUTH, OBATA & KASSABAUM, INC.
ARCHITECTURE, INTERIORS, PLANNING
323 WEST EIGHTH STREET, SUITE 500, KANSAS CITY, MISSOURI 64105 816-221-1876

hok SPORT

KEY PLAN

THE STADIUM
One Booker Creek Place
St. Petersburg, Pinellas County, Florida

Approval Dates	Owner	Owner Rep.	Construct. Manager	Architect Consult.
DD	11-21-86	11-21-86	11-21-86	11-21-86
CD				

Project No. 4008-00179541.01

Drawn	Reviewed	Issued
Revisions DD 3-26-86		

No.	Description	Date
1		
2		
3		
4		
5		
6		
7		
8		
9		
10		
11		
12		
13		
14		
15		
16		
17		
18		

Category — Sub-Cat. — Sheet

3.8E-4

CABLE TRUSS AT COLUMN LINE R19 ASSEMBLY DETAILS

ACOUSTICAL
STRUCTURAL
PLUMBING
ELECTRICAL
MECHANICAL
OTHER
NOTE
FINISH
WALL
GRID
TITLE
OVERLAY DATE
LEVEL/QUADRANT

NOTES – LEGEND

KKBNA/PC ENGINEERS
STRUCTURAL, MECHANICAL, ELECTRICAL, PLUMBING
114 Fifth Avenue
New York, New York 10011 212-242-0300

POST, BUCKLEY, SCHUH & JERNIGAN, INC.
CONSULTING CIVIL ENGINEERS AND PLANNERS
250 First Avenue South
St. Petersburg, Florida 33701 813-446-7275

THE JOINER-ROSE GROUP
CONSULTANTS IN ACOUSTICS
4125 Centurion Way
Dallas, Texas 75234 214-392-7800

HELLMUTH, OBATA & KASSABAUM, INC.
ARCHITECTURE, INTERIORS, PLANNING,
GRAPHICS, ENGINEERING
1323 WEST EIGHTH STREET
SUITE 700
KANSAS CITY, MISSOURI 64105
816-221-1576

SPORT

KEY PLAN

THE STADIUM
One Booker Creek Place
St. Petersburg, Pinellas County, Florida

Project No. 4008-001/9541.01

Approval Dates	Drawn	Reviewed	Issued
			6-22-87

	Owner	Owner Rep	Contractor	Architect Consult
DD	11/21/86	12/1/86	12/1/86	11/21/86
CD	9-28-87	9-28-87	9-28-87	9-28-87

No.	Revisions Description	Date
1		
2		
3		
4		
5		
6		
7		
8		
9		
10		
11		
12		
13		
14		
15		
16		
17		
18		

Category Sub-Cat Sheet
3.8H-1

CATWALK PLAN & ELEVATION

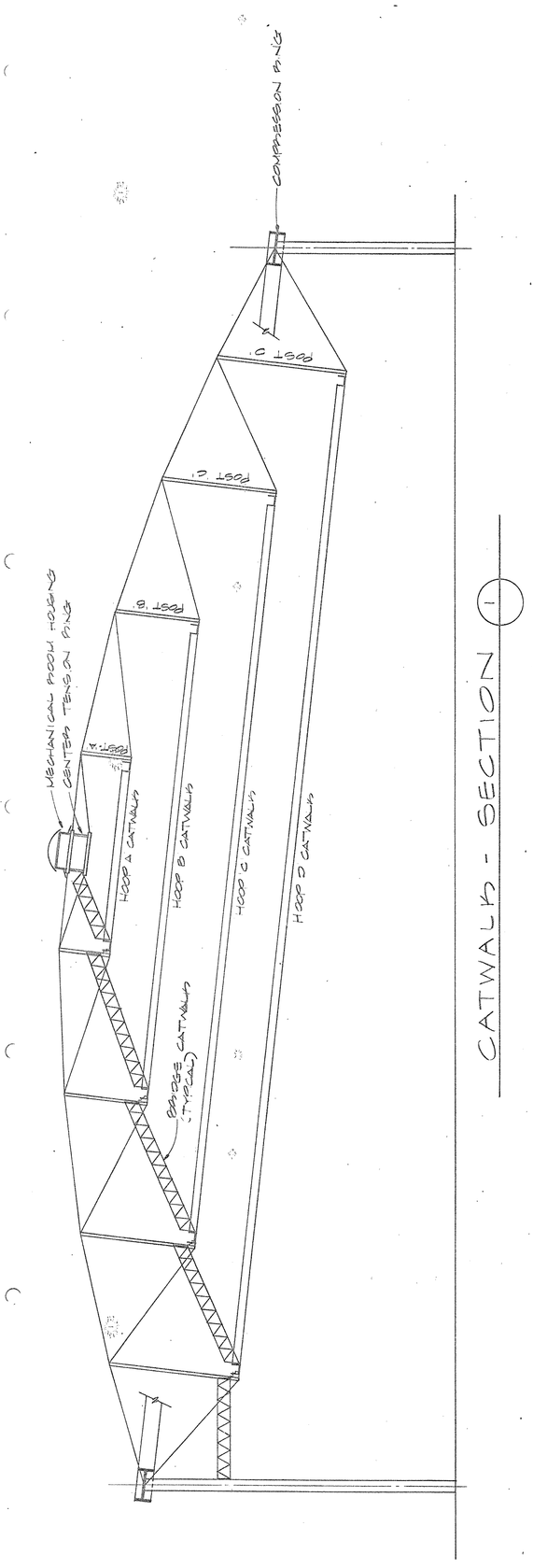

CATWALK - SECTION 1

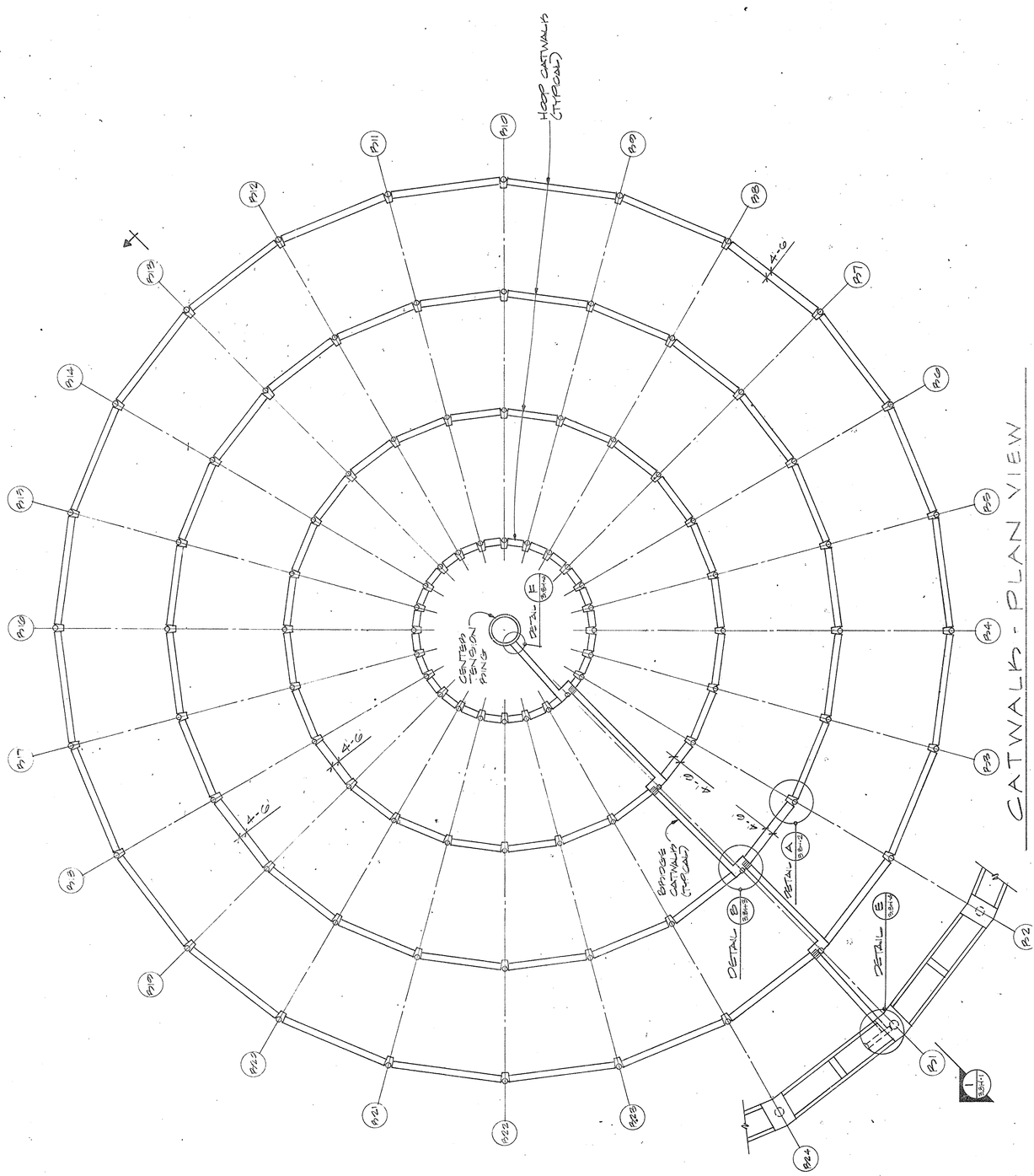

CATWALK - PLAN VIEW

OVERLAY DATE
LEVEL/QUADRANT | TITLE T | GRID | WALL | FINISH | NOTE | OTHER | MECHANICAL | ELECTRICAL | PLUMBING | STRUCTURAL | ACOUSTICAL

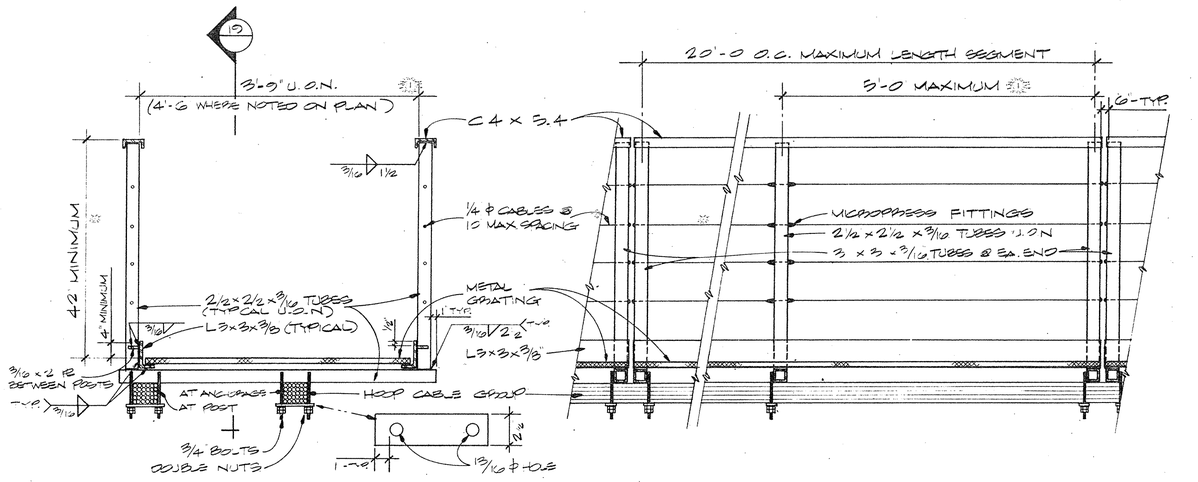

SECTION 19

ELEVATION OF TYPICAL HOOP CATWALK
SEE DETAIL A THIS DRAWING.

SECTION 19

SEE SECTION '18' THIS DRAWING.

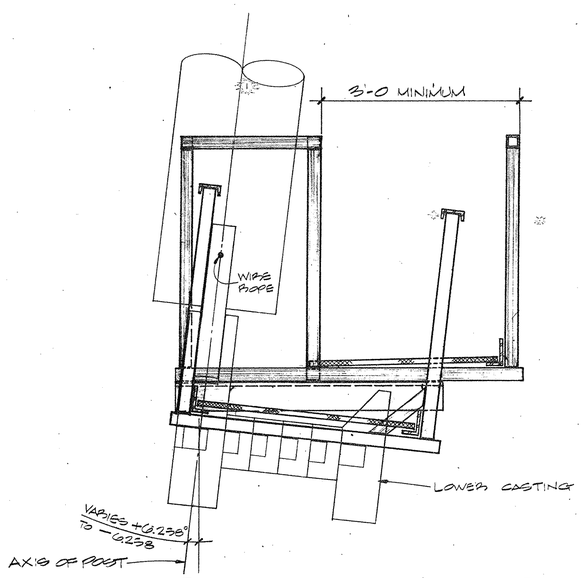

SECTION 20

SEE DETAIL 'A' THIS DRAWING.

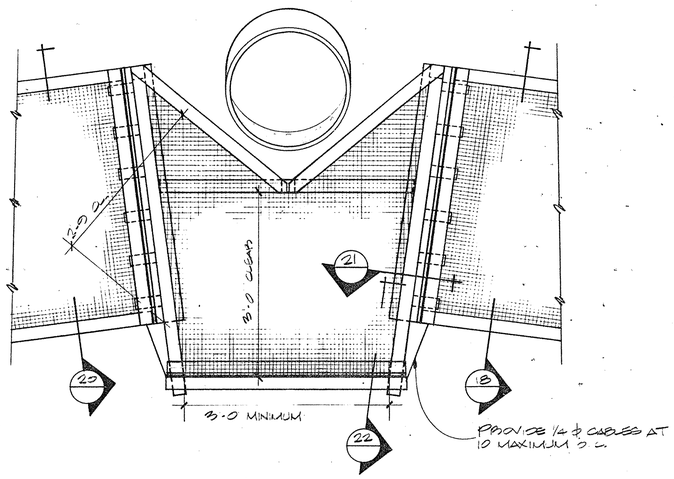

DETAIL A

PLAN VIEW OF TYPICAL HOOP CATWALK LANDING AREA AT POST.
SEE DRAWING 3.8H-1

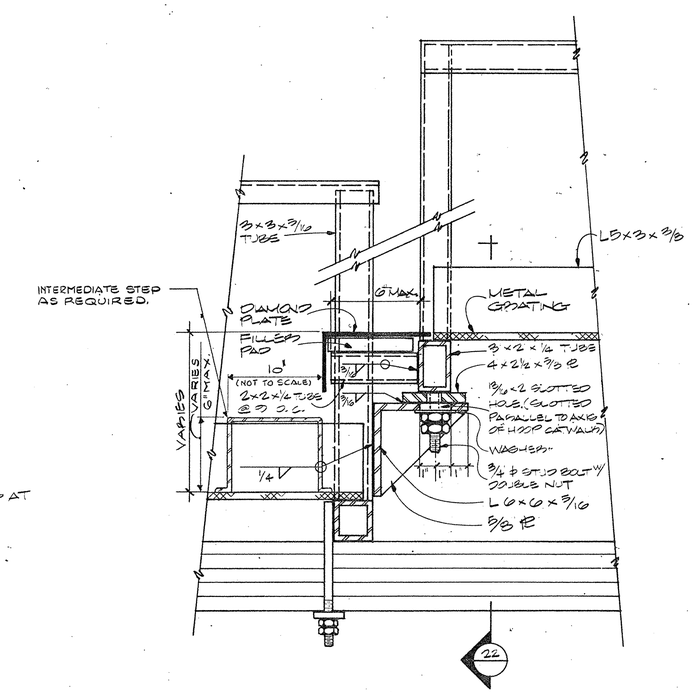

SECTION 21

SEE DETAIL A THIS DRAWING.

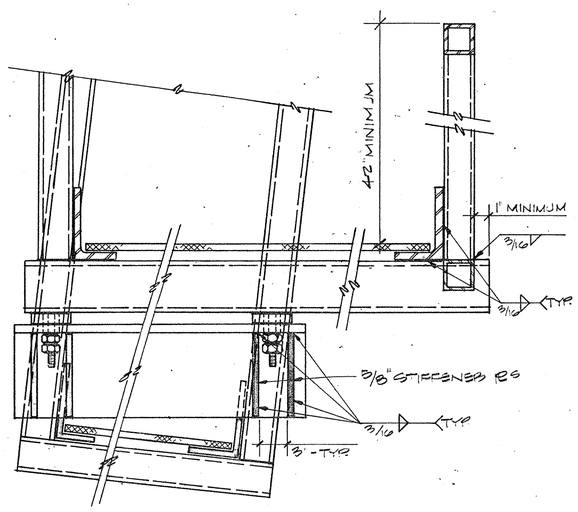

SECTION 22

SEE DETAIL 'A' THIS DRAWING.

NOTES:

1. ELECTRICAL BALLASTS & WIREWAY SHALL BE CONNECTED TO THE VERTICAL TUBE OF THE CATWALK FROM THE OUTSIDE.
2. CONTRACTOR MUST STABILIZE THE 20'-0 SPAN CATWALK DURING ERECTION TO PREVENT BUCKLING OF ANGLES. (SEE SECTION '18' THIS DRAWING.
3. SPECIFICATIONS ISSUED FOR CONSTRUCTION PACKAGE 3B - PART 1, 2 & 3 ARE APPLICABLE TO THIS PACKAGE (3C).
4. STEEL GRATING SHALL HAVE 1" x 3/16" SERRATED BEARING BARS @ 13/16 O.C. W/ CROSS BARS @ 4" O.C. HOT DIPPED GALVANIZED AFTER FABRICATION.

NOTES – LEGEND

KKBNA PC — ENGINEERS
STRUCTURAL, MECHANICAL, ELECTRICAL, PLUMBING
114 Fifth Avenue, New York, New York 10011, 212-242-0900

POST, BUCKLEY, SCHUH & JERNIGAN, INC.
CONSULTING CIVIL ENGINEERS AND PLANNERS
2601 1st Ave. N. Suite 300, St. Petersburg, Florida 33713, 813-446-7275

HELLMUTH, OBATA & KASSABAUM, INC.
ARCHITECTURE, INTERIORS, PLANNING, GRAPHICS, INDUSTRIAL DESIGN
323 WEST EIGHTH STREET, SUITE 700, KANSAS CITY, MISSOURI 64105, 816-221-1570

THE JONES-ROSE GROUP
CONSULTANT FOR ACOUSTICS
4125 Centurion Way, Dallas, Texas 75234, 214-392-7800

hok SPORT

D C A B (R) KEY PLAN

THE STADIUM
One Booker Creek Place
St. Petersburg, Pinellas County, Florida

RECEIVED
JAN 13 1988
GEIGER/KKBNA

Approval Dates	Owner	Owner Rep.	Contractor	Architect Consult
DD	11/21/86	11/21/86	11/21/86	11/21/86
CD	9-28-87	9-28-87	9-28-87	9-28-87

Project No. 4008-001/9541.01

Drawn	Reviewed	Issued
		6-22-87

Revisions		
No.	Description	Da'e
1		
2		
3		
4		
5		
6		
7		
8		
9		
10		
11		
12		
13		
14		
15		
16		
17		
18		

Category	Sub-Cat	Sheet
		3.8H-2

HOOP CATWALK & DETAILS

LEVEL/QUADRANT OVERLAY DATE | TITLE | GRID | WALL | FINISH | NOTE | OTHER | MECHANICAL | ELECTRICAL | PLUMBING | STRUCTURAL | ACOUSTICAL

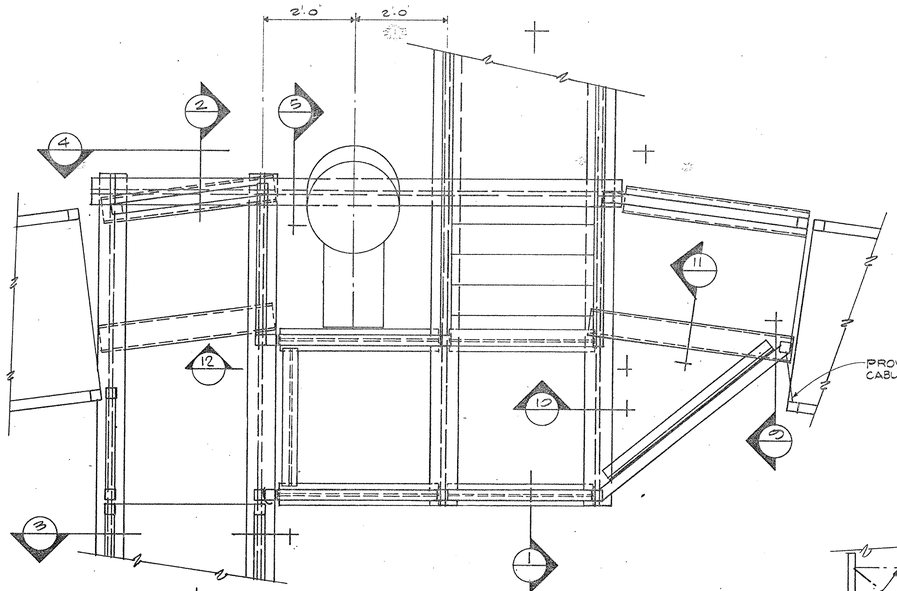

DETAIL (B)

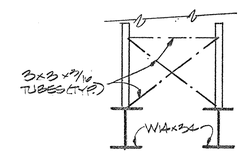

SECTION (22)

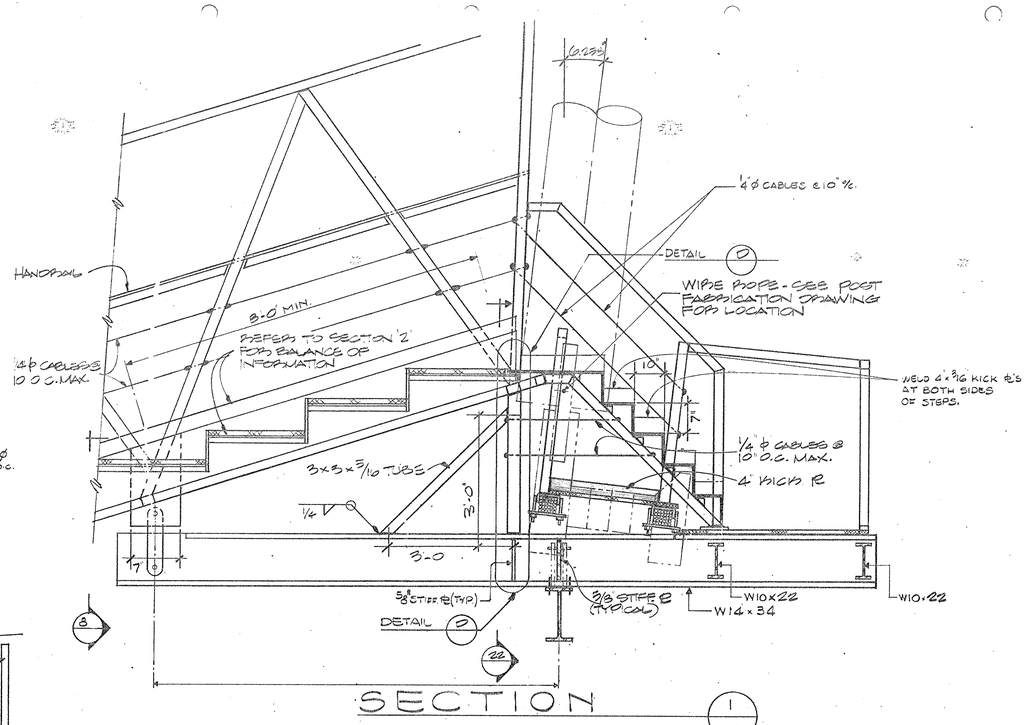

SECTION (1)

CONTRACTOR SHALL MODIFY ENDS OF CATWALK AS NECESSARY

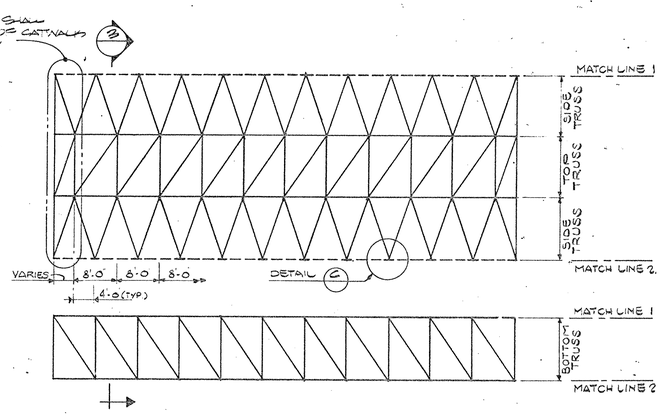

BRIDGE CATWALK TRUSS DIAGRAM

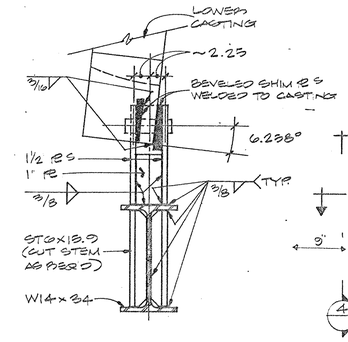

SECTION (3)
SEE SECTION 4, THIS DRAWING AND DETAIL 'B' THIS DRAWING

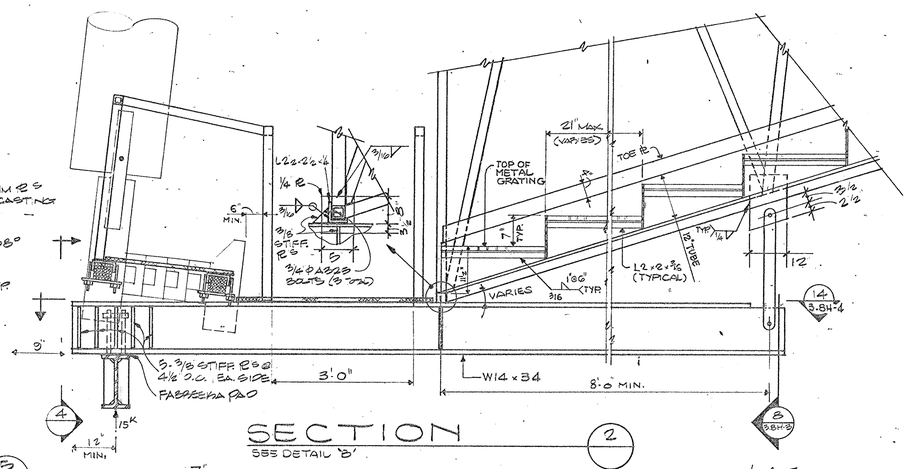

SECTION (2)
SEE DETAIL '8'

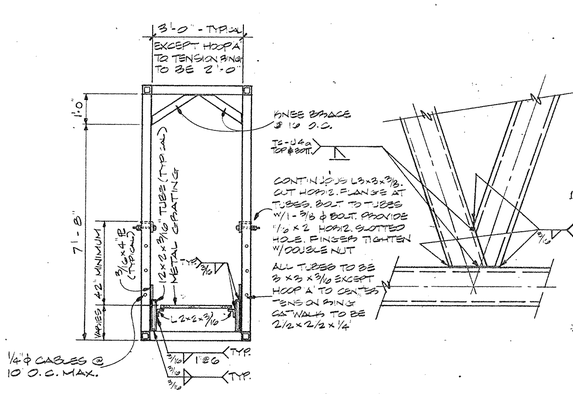

SECTION (3)
SEE BRIDGE CATWALK TRUSS DIAGRAM

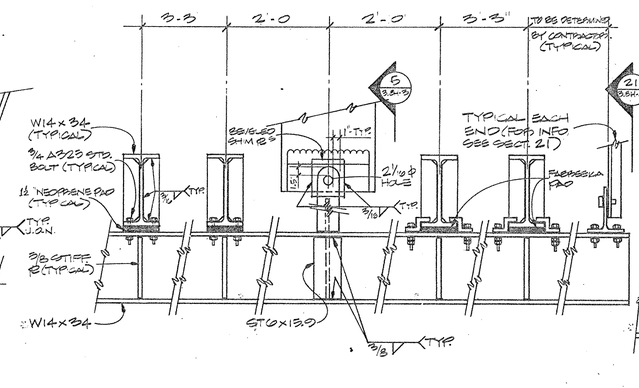

DETAIL (C)
TYPICAL TUBE CONN. FOR BRIDGE CATWALK

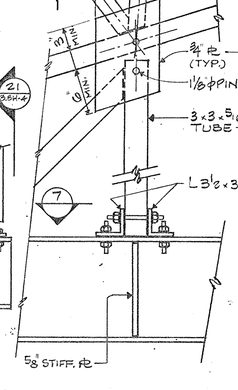

SECTION (4)
SEE SECTION '2', THIS DRAWING.

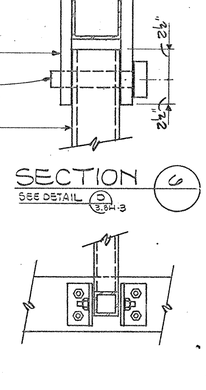

DETAIL (D)
SEE SECTION '1', THIS DRAWING.

SECTION (6)
SEE DETAIL (D) 3.8H-3

SECTION (7)
SEE DETAIL (D) 3.8H-3

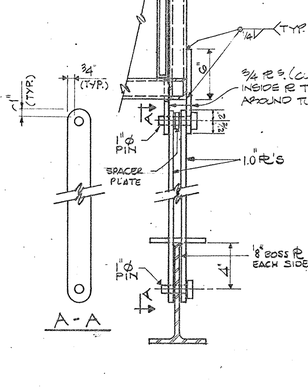

SECTION (8)

NOTES – LEGEND

KKBNA/PC
STRUCTURAL, MECHANICAL, ELECTRICAL, PLUMBING ENGINEERS
11th Fifth Avenue
New York, New York 10011
212-242-0900

POST, BUCKLEY, SCHUH & JERNIGAN, INC.
CIVIL ENGINEERS AND PLANNERS
1401 East Park Ave., Suite 300
St. Petersburg, Florida 33701
813-446-7275

THE JONER-ROSE GROUP
CONSULTANTS IN ACOUSTICS
4135 Centurion Way
Dallas, Texas 75244
214-392-7800

HELLMUTH, OBATA & KASSABAUM, INC.
ARCHITECTS, ENGINEERS, PLANNERS, GRAPHICS, ENGINEERING
1323 WEST EIGHTH STREET
SUITE 210
KANSAS CITY, MISSOURI 64105
816-221-1576

hok SPORT

D C A B

KEY PLAN

THE STADIUM
One Booker Creek Place
St. Petersburg, Pinellas County, Florida

RECEIVED
JAN 13 1988
GENSLER/KKBNA

Approval Dates	Owner	Owner Rep	Contractor	Architect Consult
DD	11/21/86	11/21/86	11/21/86	11/21/86
CD	9-28-87	9-28-87	9-28-87	9-28-87

Project No. 4008-001/9541.01		
Drawn	Reviewed	Issued
		6-22-87

Revisions		
No.	Description	Da'e
1		
2		
3		
4		
5		
6		
7		
8		
9		
10		
11		
12		
13		
14		
15		
16		
17		
18		

Category	Sub-Cat.	Sheet
		3.8H-3

BRIDGE CATWALK & CONNECTION AT POST.

ACOUSTICAL
STRUCTURAL
PLUMBING
ELECTRICAL
MECHANICAL
OTHER
NOTE
FINISH
WALL
REFERENCE

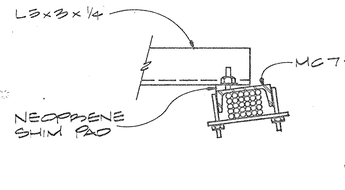

SECTION 9
SEE DETAIL 'B' DRAWING 3.8H-3

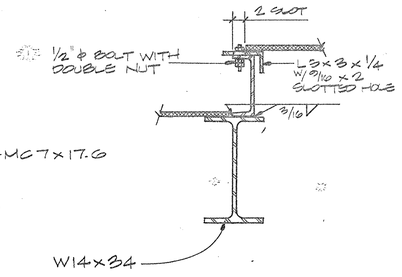

SECTION 10
SEE DETAIL 'B', DRAWING 3.8H-3.

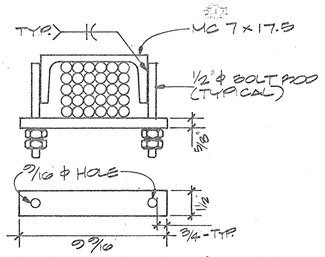

SECTION 11
SEE DETAIL 'B', DRAWING 3.8H-3.

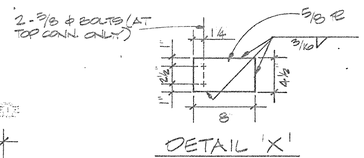

DETAIL 'X'

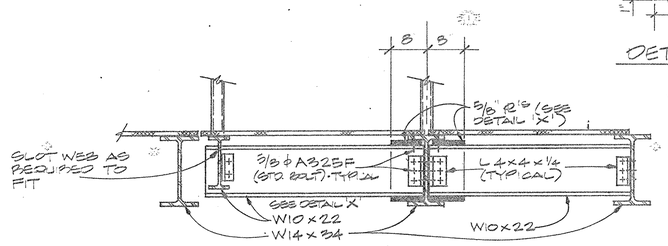

SECTION 12
SEE DETAIL 'B', DRAWING 3.8H-3

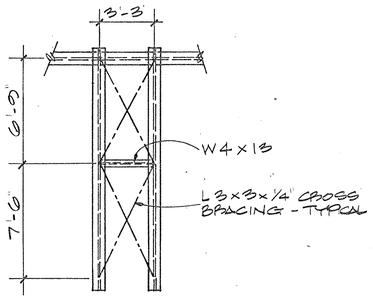

SECTION 14
SEE SECTION 2, DWG 3.8H-3

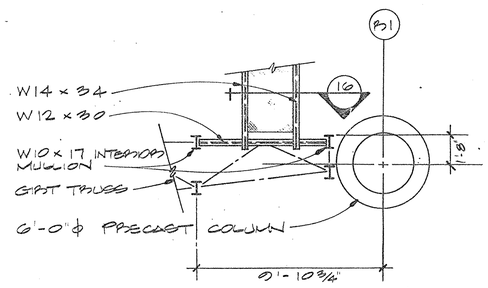

DETAIL E
SEE DRAWING 3.8H-1

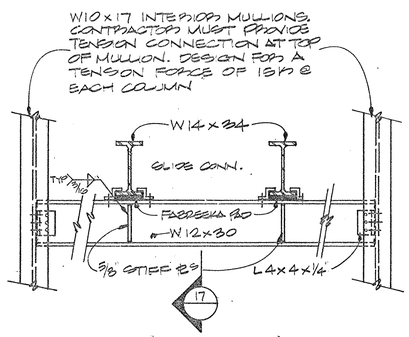

SECTION 16
SEE DETAIL 'E', THIS DRAWING.

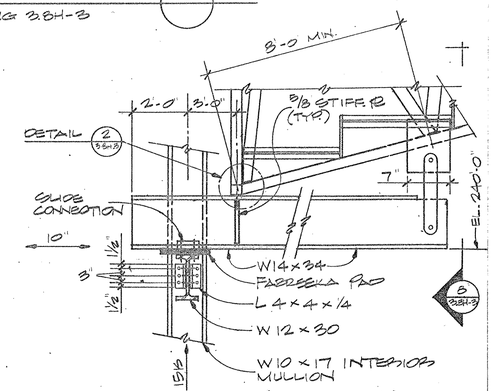

SECTION 17
SEE SECTION '16' THIS DRAWING.

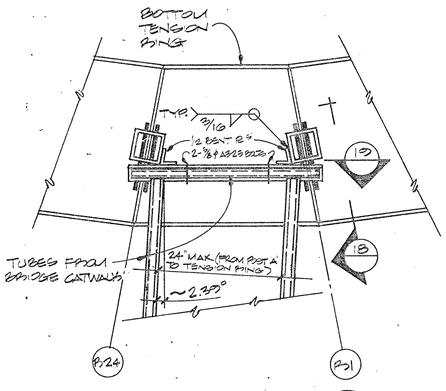

DETAIL F
SEE DRAWING 3.8H-1

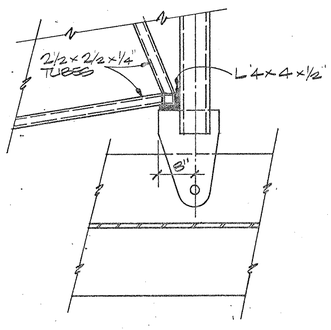

SECTION 18
SEE DETAIL 'F', THIS DRAWING.

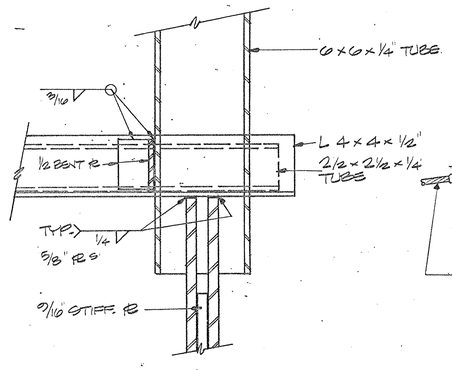

SECTION 19
SEE DETAIL 'F', THIS DRAWING.

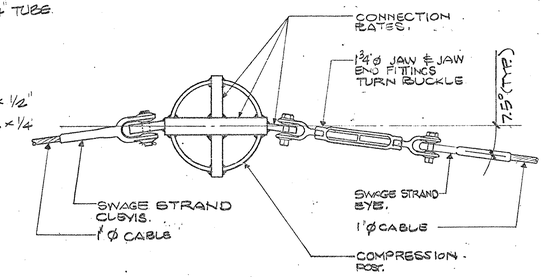

SECTION 20
SEE DWG. 3.8S-4 FOR SIZES AND DETAILS.

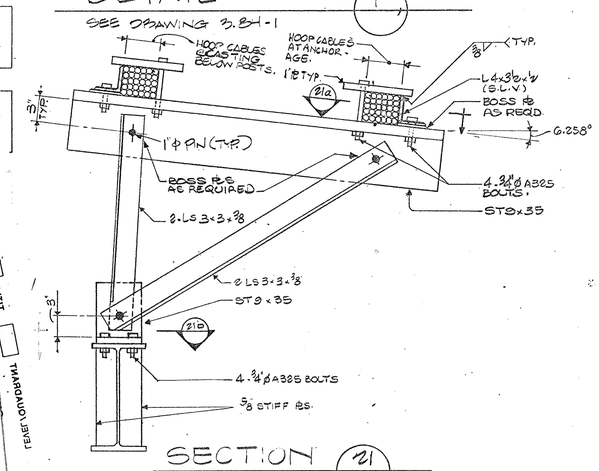

SECTION 21
SEE DETAIL 'B' DWG. 3.8H-3

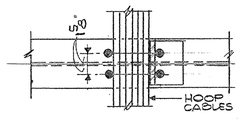

SECTION 21a
SEE SECT. 21 THIS DWG.

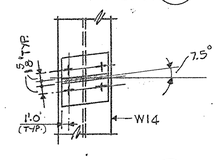

SECTION 21b
SEE SECT. 21 THIS DWG.

NOTES - LEGEND

KKBNA/PC
STRUCTURAL, MECHANICAL, ELECTRICAL, PLUMBING
116 Fifth Avenue
New York, New York 10011
212-242-0900

POST, BUCKLEY, SCHUH & JERNIGAN, INC.
CIVIL & STRUCTURAL ENGINEERS AND PLANNERS
200 First Avenue South
St. Petersburg, Florida 33701
813-446-7275

THE JONER-ROSE GROUP
CONSULTANTS IN ACOUSTICS
1125 Central Expy. North
Allen, Texas 75013
214-382-7600

HELLMUTH, OBATA & KASSABAUM, INC.
ARCHITECTURE, INTERIORS, PLANNING, GRAPHICS, ENGINEERING
323 WEST EIGHTH STREET
SUITE 200
KANSAS CITY, MISSOURI 64105
816-221-1576

101 hok SPORTS

D C A B (R1)
KEY PLAN

THE STADIUM
One Booker Creek Place
St. Petersburg, Pinellas County, Florida

RECEIVED
JAN 13 1988
GEIGER/KKBNA

Approval Dates	Owner	Owner Rep.	Contractor	Architect Consult
DD	11/21/86	11/21/86	11/21/86	11/21/86
CD	9-28-87	9-28-87	9-28-87	9-28-87

Project No. 4008-001/9541.01

Drawn	Reviewed	Issued
		6-22-87

Revisions		
No.	Description	Da'e
1		
2		
3		
4		
5		
6		
7		
8		
9		
10		
11		
12		
13		
14		
15		
16		
17		
18		

Category	Sub-Cat.	Sheet
		3.8H-4

BRIDGE CATWALK & CONNECTION AT TENSION & COMPRESSION RINGS

STRUCTURAL ACOUSTICAL PLUMBING ELECTRICAL MECHANICAL OTHER NOTE TITLE TAMARAUD/JERI

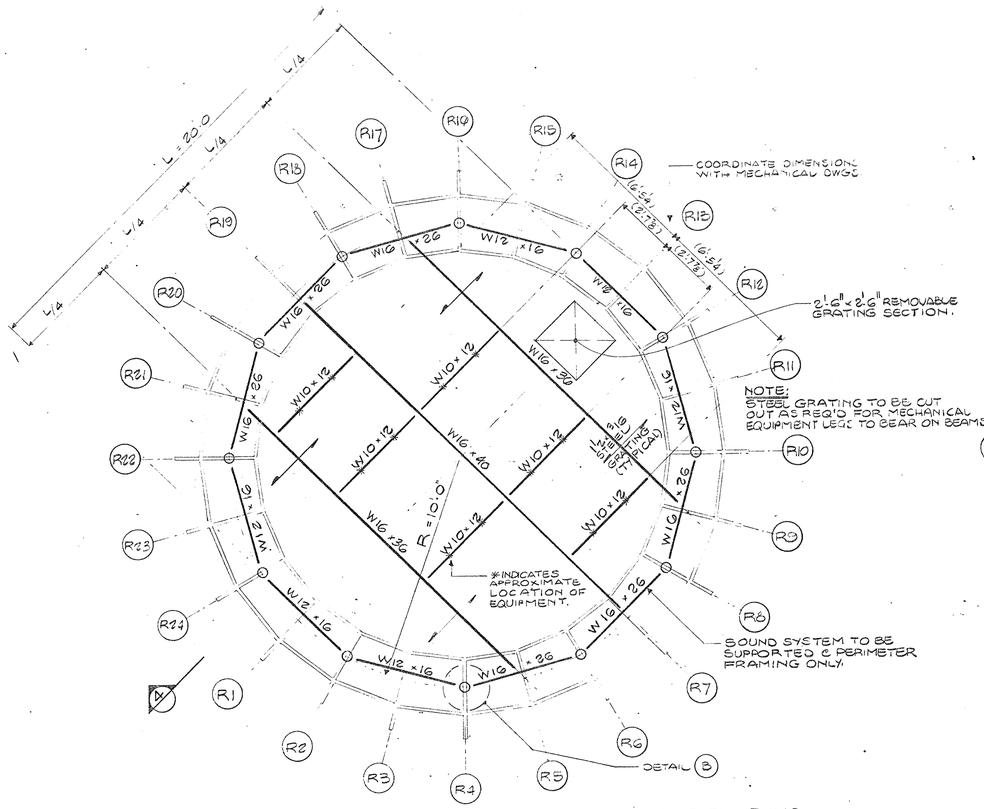

MECHANICAL PLATFORM FRAMING PLAN AT LOWER TENSION RING

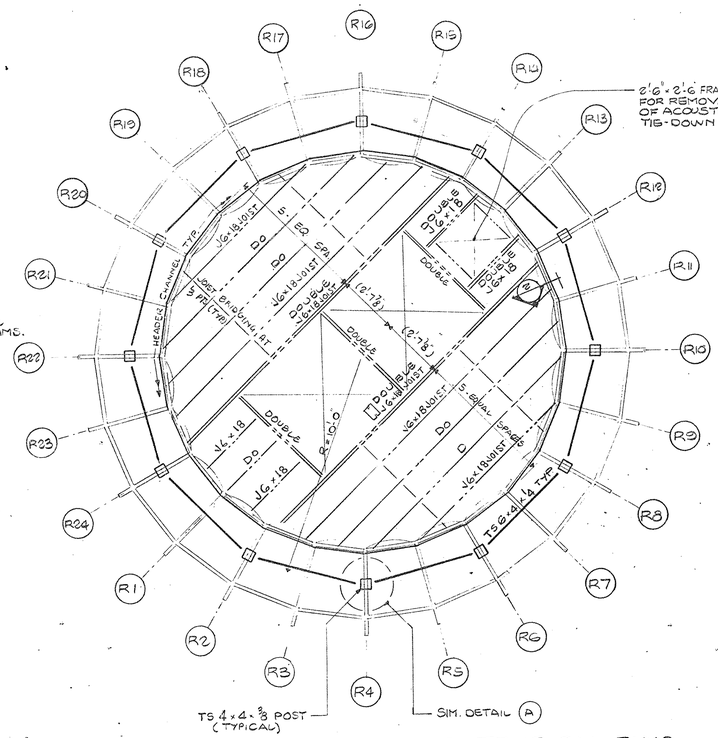
HEADER CHANNEL
W6x18 JOIST
DOUBLE W6x18 JOIST
W6x18 JOIST
DOUBLE W6x18 JOIST
DOUBLE W6x18 JOIST
W6x18 JOIST
DOUBLE W6x18 JOIST
W6x18 JOIST
DOUBLE W6x18 JOIST
W6x18 JOIST
W6x18 JOIST

GEIGER ENGINEERS
Geiger Lynch Emery Campbell Engineers P.C.
2 Executive Blvd., Suite 309 | Suffern, NY 10901 | 845.368.3330

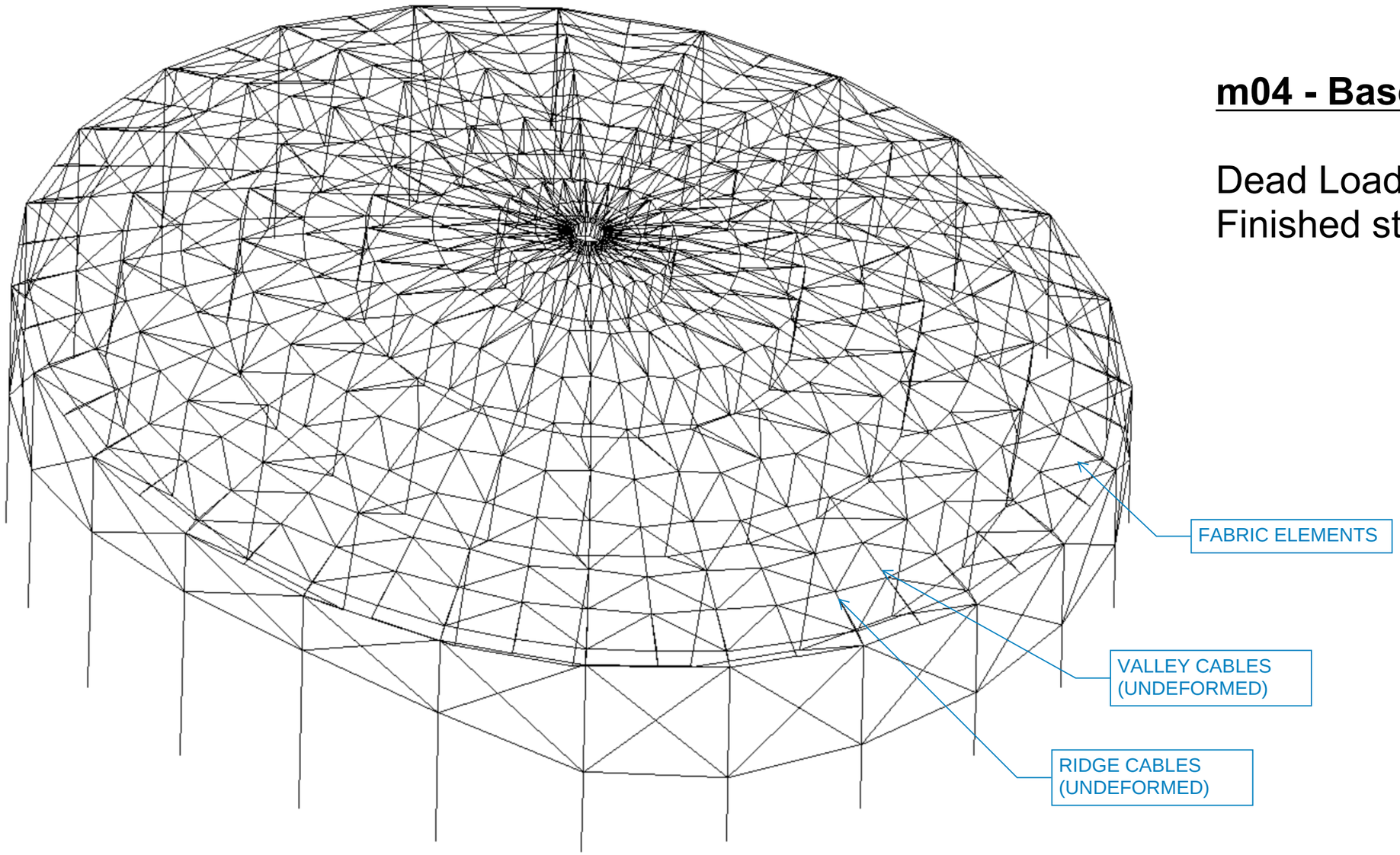

m04 - Base model

Dead Load +Prestress
Finished structure with fabric

2024.11.04 STUDY - TROPICANA FABRIC INSTALLATION STUDY

GEIGER ENGINEERS
Geiger Lynch Emery Campbell Engineers P.C.
2 Executive Blvd., Suite 309 | Suffern, NY 10901 | 845.368.3330

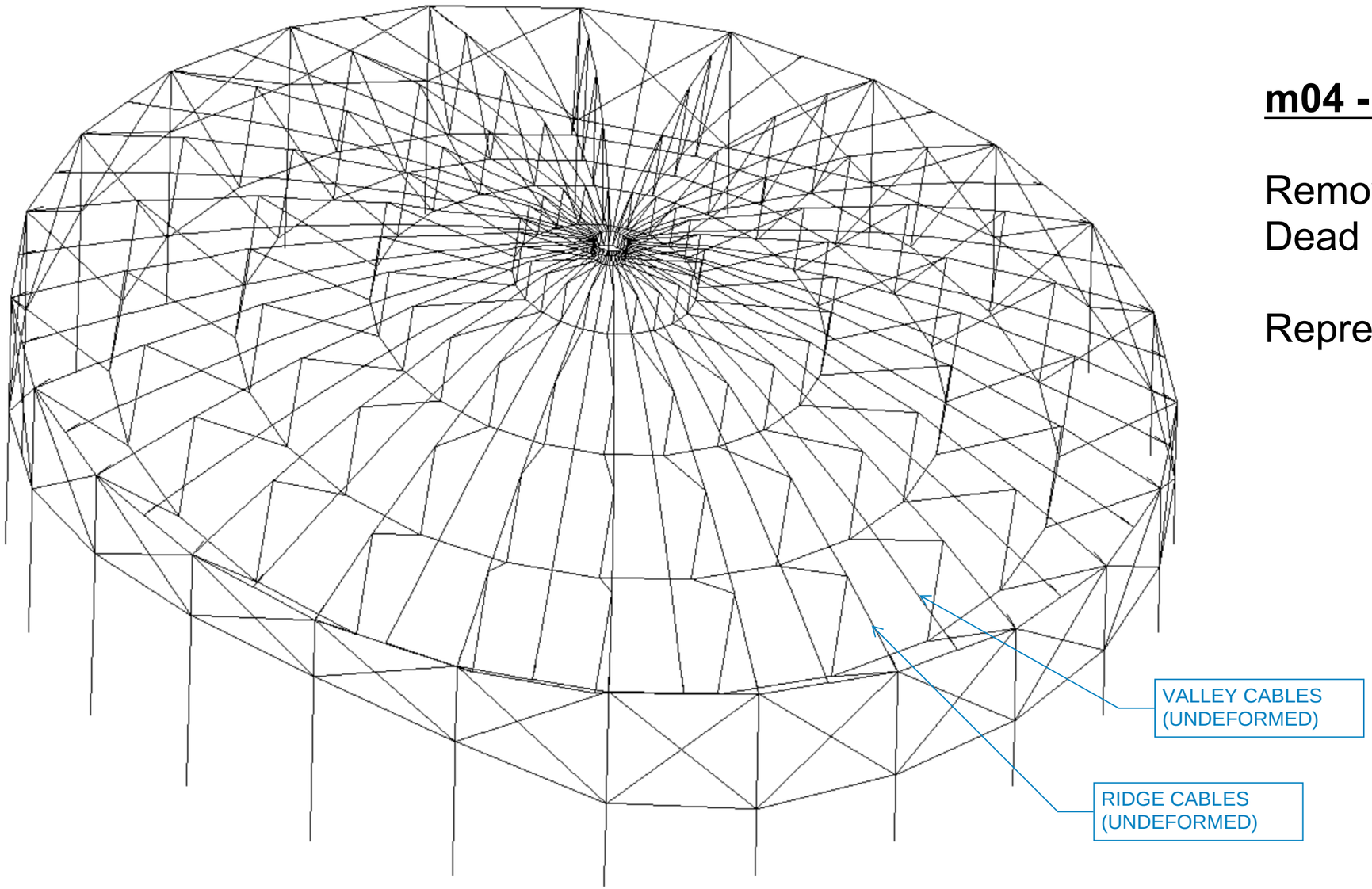

m04 - No Fabric

Removed fabric elements from Dead Load +Prestress model.

Represents current state of roof.

2024.11.04 STUDY - TROPICANA FABRIC INSTALLATION STUDY

GEIGER ENGINEERS
Geiger Lynch Emery Campbell Engineers P.C.
2 Executive Blvd., Suite 309 | Suffern, NY 10901 | 845.368.3330

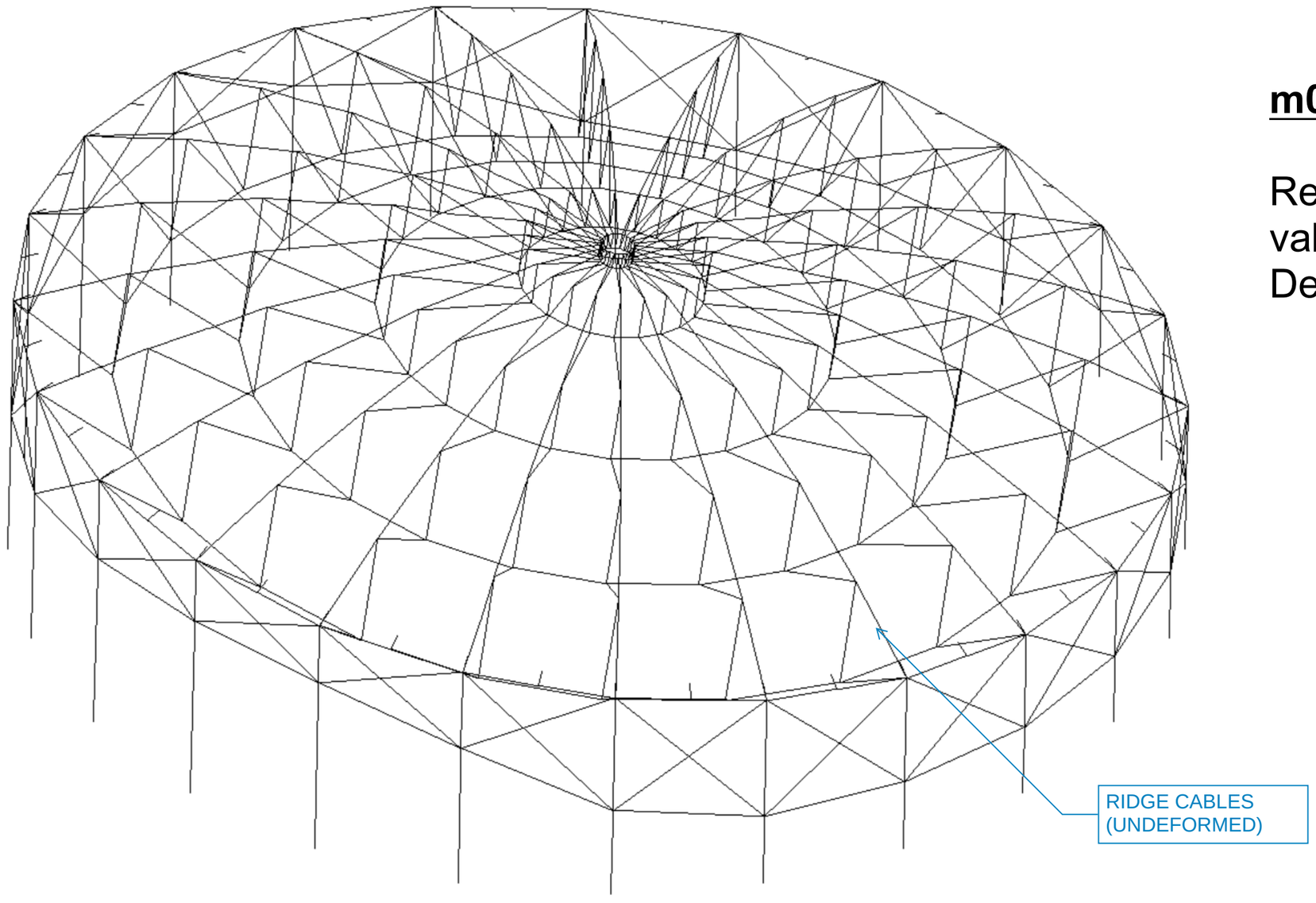

m04 - No Fabric, No Valley

Removed fabric elements and valley cables from Dead Load +Prestress model.

2024.11.04 STUDY - TROPICANA FABRIC INSTALLATION STUDY

GEIGER ENGINEERS
Geiger Lynch Emery Campbell Engineers P.C.
2 Executive Blvd., Suite 309 | Suffern, NY 10901 | 845.368.3330

now	11/4/2024
last updated	11/4/2024
model	m04

K:\2024\224094-00 Tropicana Field - Condition Assessment\Engineering\analysis\coarse model\[Cable Capacities.xlsx]m04

Summary of Cable Forces

					Demand			Design Check		
Group	Description	7 Wire Strands	1 1/2" Wire Ropes	Allowable Tension (kips)*	m04-Base	m04-No Fabric	m04-No Fabric or Valley	m04-Base	m04-No Fabric	m04-No Fabric or Valley
CABLE 01	Ridge Cable - tension ring to A	0	1	95	63	103	148	0.67	1.09	1.57
CABLE 02	Ridge Cable - A to B	4	1	201	96	149	171	0.48	0.74	0.85
CABLE 03	Ridge Cable - B to C	14	1	467	284	346	359	0.61	0.74	0.77
CABLE 04	Ridge Cable - C to D	26	1	787	578	630	637	0.73	0.80	0.81
CABLE 05	Ridge Cable - D to concrete ring	52	1	1480	1058	1081	1080	0.72	0.73	0.73
CABLE 06	valley cable	16	0	426	85	18	0	0.20	0.04	0.00
CABLE 07	Diagonal - tension ring to A	4	0	107	36	45	21	0.34	0.42	0.20
CABLE 08	Diagonal - A to B	10	0	266	187	193	184	0.70	0.72	0.69
CABLE 09	Diagonal - B to C	12	0	320	288	278	270	0.90	0.87	0.84
CABLE 10	Diagonal - C to D	26	0	693	493	466	458	0.71	0.67	0.66
CABLE 11	Diagonal - D to E	46	0	1225	824	776	764	0.67	0.63	0.62
CABLE 13	Tension hoop - A	40	0	1065	701	725	690	0.66	0.68	0.65
CABLE 14	Tension hoop - B	45	0	1199	1030	994	967	0.86	0.83	0.81
CABLE 15	Tension hoop - C	80	0	2131	1634	1546	1519	0.77	0.73	0.71
CABLE 16	Tension hoop - D	140	0	3729	2549	2401	2365	0.68	0.64	0.63

*Factor of safety = 2.2

Model	Description
m04-Base	Dead load + prestress - full roof model
m04-No Fabric	Removed fabric elements from DL+PS model
m04-No Fabric or Valley	Removed fabric elements and valley cables from DL+PS model

GEIGER ENGINEERS

Geiger Lynch Emery Campbell Engineers P.C.

Tropicana Field Roof
Structure Condition Assessment

St. Petersburg, Florida

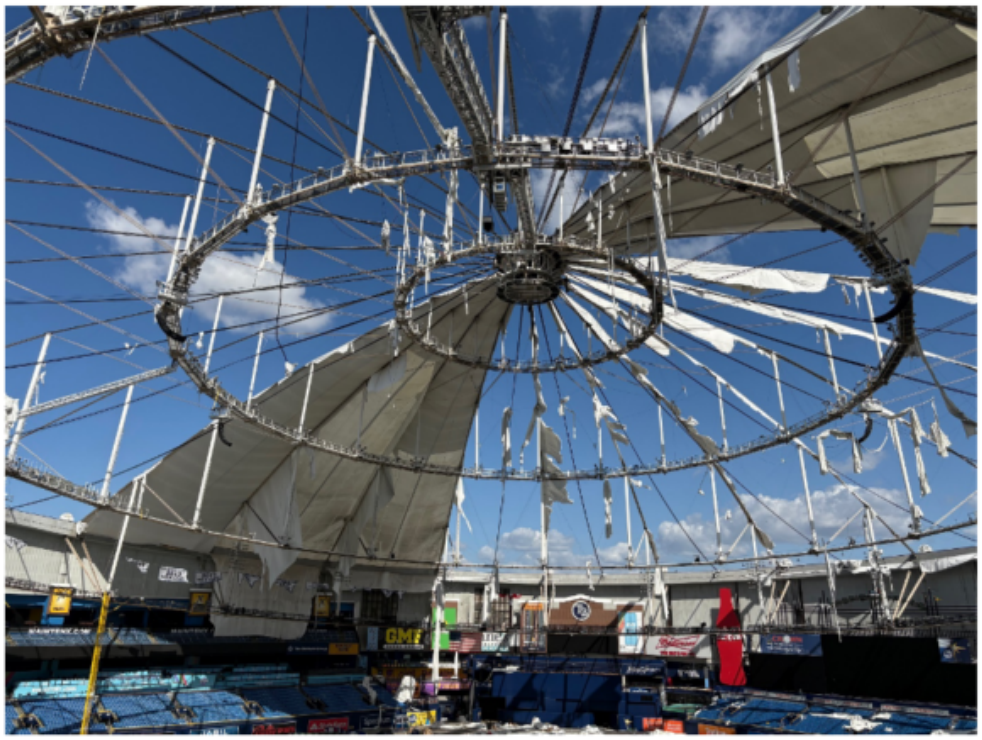

Report Information

Report Date: 29 October 2024
Report Prepared by: Geiger Engineers
Report Prepared for: Hennessy/ AECOM Hunt
Engineer of Record: David M. Campbell, P.E.
Geiger Job No: 224094-00

DAVID M. CAMPBELL LICENSE No 73244 STATE OF FLORIDA PROFESSIONAL ENGINEER

2 Executive Blvd., Suite 309 | Suffern, NY 10901
845.368.3330 | www.geigerengineers.com

Metal Panel System

AECOM Hunt contacted Crown Corr (the original subcontractor of the system) to assist with the assessment of the metal panel system. Observation of the of the stadium indicated that significant damage was sustained not only by the exterior layer, but damage occurred on the interior layer of the panel system. Cown Corr performed an on-inspection to quantify the extent of the damage and to discuss the sequence of repairs for this work.

Cost information is included as a part of the repair estimate in Section G.

C

Building Electrical

HENNESSY CONSTRUCTION SERVICES

AECOM HUNT

A. Building Electrical

1. Building Main Electrical Service Assessment

APG Electrical was enlisted to assist with assessment of the main electrical systems for the facility. A system check-sheet was developed to assist with the assessment and to document the state of each system. In general, power to the facility was off at the time of the inspection. Systems were evaluated as described in each of the separate check-sheets. Items were visually inspected as noted, however have not been fully energized.

It should be noted that the sports light power system located in the catwalk structure of the roof support structure are only NEMA 1 (indoor) rated and are not classified for exterior exposure as occurred with the loss of the fabric roof panels above.

Form detail

Electrical Systems Checklist Report

Created on	Nov 4, 2024, 1:06 PM EST
Created by	**Douglas Utt** (AECOM Hunt)
Total items	58
Sorted by	ID (Ascending)
Filtered by	Status (In review|Closed) Template name (ELECTRICAL SYSTEM DAMAGE CHECKLIST)

Contents

#1: ELECTRICAL SYSTEM DAMAGE CHECKLIST 4
#2: ELECTRICAL SYSTEM DAMAGE CHECKLIST 6
#3: ELECTRICAL SYSTEM DAMAGE CHECKLIST 8
#5: ELECTRICAL SYSTEM DAMAGE CHECKLIST 10
#6: ELECTRICAL SYSTEM DAMAGE CHECKLIST 13
#7: ELECTRICAL SYSTEM DAMAGE CHECKLIST 15
#8: ELECTRICAL SYSTEM DAMAGE CHECKLIST 20
#10: ELECTRICAL SYSTEM DAMAGE CHECKLIST 23
#11: ELECTRICAL SYSTEM DAMAGE CHECKLIST 25
#12: ELECTRICAL SYSTEM DAMAGE CHECKLIST 27
#13: ELECTRICAL SYSTEM DAMAGE CHECKLIST 29
#14: ELECTRICAL SYSTEM DAMAGE CHECKLIST 32
#15: ELECTRICAL SYSTEM DAMAGE CHECKLIST 34
#16: ELECTRICAL SYSTEM DAMAGE CHECKLIST 38
#17: ELECTRICAL SYSTEM DAMAGE CHECKLIST 40
#18: ELECTRICAL SYSTEM DAMAGE CHECKLIST 44
#19: ELECTRICAL SYSTEM DAMAGE CHECKLIST 48
#20: ELECTRICAL SYSTEM DAMAGE CHECKLIST 51
#21: ELECTRICAL SYSTEM DAMAGE CHECKLIST 54
#22: ELECTRICAL SYSTEM DAMAGE CHECKLIST 61
#23: ELECTRICAL SYSTEM DAMAGE CHECKLIST 64
#24: ELECTRICAL SYSTEM DAMAGE CHECKLIST 67
#25: ELECTRICAL SYSTEM DAMAGE CHECKLIST 71
#26: ELECTRICAL SYSTEM DAMAGE CHECKLIST 75
#27: ELECTRICAL SYSTEM DAMAGE CHECKLIST 77
#28: ELECTRICAL SYSTEM DAMAGE CHECKLIST 82
#29: ELECTRICAL SYSTEM DAMAGE CHECKLIST 85
#30: ELECTRICAL SYSTEM DAMAGE CHECKLIST 87
#31: ELECTRICAL SYSTEM DAMAGE CHECKLIST 90
#133: ELECTRICAL SYSTEM DAMAGE CHECKLIST 92
#136: ELECTRICAL SYSTEM DAMAGE CHECKLIST 94
#137: ELECTRICAL SYSTEM DAMAGE CHECKLIST 96
#138: ELECTRICAL SYSTEM DAMAGE CHECKLIST 98
#139: ELECTRICAL SYSTEM DAMAGE CHECKLIST 100
#140: ELECTRICAL SYSTEM DAMAGE CHECKLIST 102
#141: ELECTRICAL SYSTEM DAMAGE CHECKLIST 104
#142: ELECTRICAL SYSTEM DAMAGE CHECKLIST 106
#143: ELECTRICAL SYSTEM DAMAGE CHECKLIST 108
#144: ELECTRICAL SYSTEM DAMAGE CHECKLIST 110
#145: ELECTRICAL SYSTEM DAMAGE CHECKLIST 112
#146: ELECTRICAL SYSTEM DAMAGE CHECKLIST 114
#147: ELECTRICAL SYSTEM DAMAGE CHECKLIST 116
#148: ELECTRICAL SYSTEM DAMAGE CHECKLIST 118
#149: ELECTRICAL SYSTEM DAMAGE CHECKLIST 120
#150: ELECTRICAL SYSTEM DAMAGE CHECKLIST 122
#151: ELECTRICAL SYSTEM DAMAGE CHECKLIST 124
#152: ELECTRICAL SYSTEM DAMAGE CHECKLIST 126
#153: ELECTRICAL SYSTEM DAMAGE CHECKLIST 128
#154: ELECTRICAL SYSTEM DAMAGE CHECKLIST 130

#155: ELECTRICAL SYSTEM DAMAGE CHECKLIST 132
#156: ELECTRICAL SYSTEM DAMAGE CHECKLIST 134
#157: ELECTRICAL SYSTEM DAMAGE CHECKLIST 136
#158: ELECTRICAL SYSTEM DAMAGE CHECKLIST 138
#159: ELECTRICAL SYSTEM DAMAGE CHECKLIST 140
#160: ELECTRICAL SYSTEM DAMAGE CHECKLIST 142
#161: ELECTRICAL SYSTEM DAMAGE CHECKLIST 144
#162: ELECTRICAL SYSTEM DAMAGE CHECKLIST 146
#163: ELECTRICAL SYSTEM DAMAGE CHECKLIST 148

Form detail

#1: ELECTRICAL SYSTEM DAMAGE CHECKLIST

AECOM

Forms

Location	
Form date	Oct 22, 2024
Template	ELECTRICAL SYSTEM DAMAGE CHECKLIST
Description	Test
Due date	Oct 22, 2024
Submitted by	**Bryan Hastings**
Status	Closed
Last update	Oct 22, 2024, 5:07 PM EDT
Last updated by	**Bryan Hastings**
Included references	Assets | Files | Forms | Issues | Photos | File Packages | Sheets | Markups on Sheets | Submittals | RFIs | PCOs | Schedule Activities

1. Electrical Systems Damage Check

1.1 System Description
Test System

1.2 Area / Room
C5205

1.3 Visually Checked
(●) Yes ( ) No ( ) N/A

1.4 Damage

	○ Yes	◉ No	○ N/A

1.5 Operational

◉ Yes	○ No	○ N/A

1.6 NEMA

◉ Yes	○ No	○ N/A

1.7 Notes/Other Comments

this looks good

Form detail

#2: ELECTRICAL SYSTEM DAMAGE CHECKLIST

AECOM

Forms

Location	
Form date	Oct 22, 2024
Template	ELECTRICAL SYSTEM DAMAGE CHECKLIST
Description	
Due date	
Submitted by	**Dominic Miranda**
Status	Closed
Last update	Oct 23, 2024, 12:27 PM EDT
Last updated by	**Dominic Miranda**
Included references	Assets | Files | Forms | Issues | Photos | File Packages | Sheets | Markups on Sheets | Submittals | RFIs | PCOs | Schedule Activities

1. Electrical Systems Damage Check

1.1 System Description
Electrical Grid

1.2 Area / Room
North Electrical Room -Level 1

1.3 Visually Checked
(●) Yes ( ) No ( ) N/A

1.4 Damage

Yes No N/A

1.5 Operational

Yes No N/A

1.6 NEMA

Yes No N/A

NEMA rated 1

1.7 Notes/Other Comments

Water was noted in the underground conduits from the ATS to the generator.Recommend extract the water and have the wiring be megawatt tested for shorts phase to phase and to ground.

References and Attachments

Photos (2)



20241022_124643_photo
Taken on Oct 22, 2024, 12:46 PM EDT
Added on Oct 22, 2024, 12:51 PM EDT
Added by Dominic Miranda



20241022_124629_photo
Taken on Oct 22, 2024, 12:46 PM EDT
Added on Oct 22, 2024, 12:51 PM EDT
Added by Dominic Miranda

Form detail

#3: ELECTRICAL SYSTEM DAMAGE CHECKLIST

AECOM

Forms

Location	
Form date	Oct 22, 2024
Template	ELECTRICAL SYSTEM DAMAGE CHECKLIST
Description	
Due date	
Submitted by	**Dominic Miranda**
Status	Closed
Last update	Oct 23, 2024, 12:25 PM EDT
Last updated by	**Dominic Miranda**
Included references	Assets | Files | Forms | Issues | Photos | File Packages | Sheets | Markups on Sheets | Submittals | RFIs | PCOs | Schedule Activities

1. Electrical Systems Damage Check

1.1 System Description
Electrical Grid

1.2 Area / Room
A -Riser-First Floor

1.3 Visually Checked
(●) Yes ( ) No ( ) N/A

1.4 Damage

- [x] Yes
- [ ] No
- [ ] N/A

1.5 Operational

- [x] Yes
- [ ] No
- [ ] N/A

1.6 NEMA

- [x] Yes
- [ ] No
- [ ] N/A

NEMA-1

1.7 Notes/Other Comments

Water noted on the panel-board equipment covers.Recommend all covers be remove and verify interior beakers were not exposed to water.

Photos (2)



20241022_125236_photo
Taken on Oct 22, 2024, 12:52 PM EDT
Added on Oct 22, 2024, 12:52 PM EDT
Added by Dominic Miranda



20241022_125223_photo
Taken on Oct 22, 2024, 12:52 PM EDT
Added on Oct 22, 2024, 12:53 PM EDT
Added by Dominic Miranda

Form detail

#5: ELECTRICAL SYSTEM DAMAGE CHECKLIST

AECOM

Forms

Location	
Form date	Oct 22, 2024
Template	ELECTRICAL SYSTEM DAMAGE CHECKLIST
Description	
Due date	
Submitted by	**Dominic Miranda**
Status	Closed
Last update	Oct 23, 2024, 12:26 PM EDT
Last updated by	**Dominic Miranda**
Included references	Assets | Files | Forms | Issues | Photos | File Packages | Sheets | Markups on Sheets | Submittals | RFIs | PCOs | Schedule Activities

1. Electrical Systems Damage Check

1.1 System Description
Electrical Grid (Scoreboard Power)

1.2 Area / Room
Distribution Board SBMZD (4Th Floor)

1.3 Visually Checked
(●) Yes ( ) No ( ) N/A

1.4 Damage

- (●) Yes ( ) No ( ) N/A

1.5 Operational
- (●) Yes ( ) No ( ) N/A

1.6 NEMA
- (●) Yes ( ) No ( ) N/A

NEMA-1

1.7 Notes/Other Comments
The equipment was exposed to water from the upper level. Recommend wiring to be tested for phase to phase and ground

References and Attachments

Photos (3)



20241022_140427_photo
Taken on Oct 22, 2024, 2:04 PM EDT
Added on Oct 22, 2024, 2:04 PM EDT
Added by Dominic Miranda



20241022_140446_photo
Taken on Oct 22, 2024, 2:04 PM EDT
Added on Oct 22, 2024, 2:10 PM EDT
Added by Dominic Miranda



20241022_140445_photo
Taken on Oct 22, 2024, 2:04 PM EDT
Added on Oct 22, 2024, 2:10 PM EDT
Added by Dominic Miranda

Form detail

#6: ELECTRICAL SYSTEM DAMAGE CHECKLIST

AECOM

Forms

Location	
Form date	Oct 22, 2024
Template	ELECTRICAL SYSTEM DAMAGE CHECKLIST
Description	
Due date	
Submitted by	**Dominic Miranda**
Status	Closed
Last update	Oct 23, 2024, 12:26 PM EDT
Last updated by	**Dominic Miranda**
Included references	Assets | Files | Forms | Issues | Photos | File Packages | Sheets | Markups on Sheets | Submittals | RFIs | PCOs | Schedule Activities

1. Electrical Systems Damage Check

1.1 System Description
Electrical Grid

1.2 Area / Room
D-Riser (4th Floor)

1.3 Visually Checked
(●) Yes ( ) No ( ) N/A

1.4 Damage

○ Yes ◉ No ○ N/A

1.5 Operational

◉ Yes ○ No ○ N/A

1.6 NEMA

◉ Yes ○ No ○ N/A

NEMA-1

1.7 Notes/Other Comments

Water was noted on panel boards surface.Recommend wiring to be tested phase to phase and to ground

References and Attachments

Photos (2)



20241022_141128_photo
Taken on Oct 22, 2024, 2:11 PM EDT
Added on Oct 22, 2024, 2:11 PM EDT
Added by Dominic Miranda



20241022_141157_photo
Taken on Oct 22, 2024, 2:11 PM EDT
Added on Oct 22, 2024, 2:12 PM EDT
Added by Dominic Miranda

Form detail

#7: ELECTRICAL SYSTEM DAMAGE CHECKLIST

AECOM

Forms

Location	
Form date	Oct 22, 2024
Template	ELECTRICAL SYSTEM DAMAGE CHECKLIST
Description	
Due date	
Submitted by	**Dominic Miranda**
Status	Closed
Last update	Oct 29, 2024, 10:47 AM EDT
Last updated by	**Dominic Miranda**
Included references	Assets | Files | Forms | Issues | Photos | File Packages | Sheets | Markups on Sheets | Submittals | RFIs | PCOs | Schedule Activities

1. Electrical Systems Damage Check

1.1 System Description
Electrical

1.2 Area / Room
Press Area (4th Floor)

1.3 Visually Checked
(●) Yes ( ) No ( ) N/A

1.4 Damage

- [x] Yes
- [ ] No
- [ ] N/A

1.5 Operational

- [ ] Yes
- [x] No
- [ ] N/A

to be verified with electricians and data cabling technicians

1.6 NEMA

- [ ] Yes
- [x] No
- [ ] N/A

1.7 Notes/Other Comments

As noted (Photos) this area was exposed to rain directly to power strips, WiFi, DAS and data cabling.We recommend a full test be exercise prior to energized the power and low voltage systems.

References and Attachments

Photos (11)



20241022_143607_photo
Taken on Oct 22, 2024, 2:36 PM EDT
Added on Oct 22, 2024, 2:36 PM EDT
Added by Dominic Miranda



20241022_143629_photo
Taken on Oct 22, 2024, 2:36 PM EDT
Added on Oct 22, 2024, 2:37 PM EDT
Added by Dominic Miranda



20241022_143648_photo
Taken on Oct 22, 2024, 2:36 PM EDT
Added on Oct 22, 2024, 2:37 PM EDT
Added by Dominic Miranda



20241022_143802_photo
Taken on Oct 22, 2024, 2:38 PM EDT
Added on Oct 22, 2024, 2:38 PM EDT
Added by Dominic Miranda

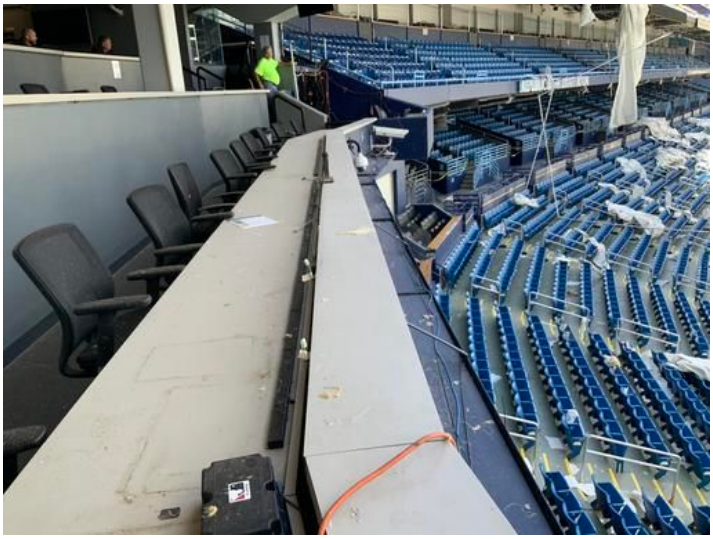

20241022_143835_photo
Taken on Oct 22, 2024, 2:38 PM EDT
Added on Oct 22, 2024, 2:39 PM EDT
Added by Dominic Miranda

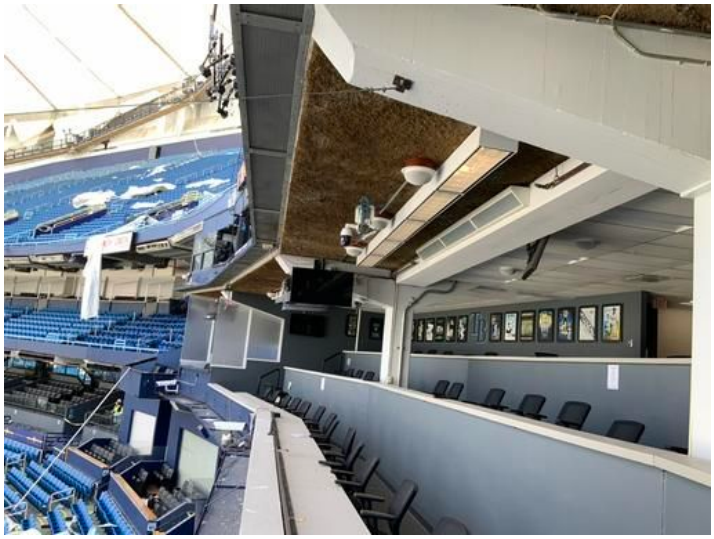

20241022_143903_photo
Taken on Oct 22, 2024, 2:39 PM EDT
Added on Oct 22, 2024, 2:39 PM EDT
Added by Dominic Miranda



20241022_143922_photo
Taken on Oct 22, 2024, 2:39 PM EDT
Added on Oct 22, 2024, 2:39 PM EDT
Added by Dominic Miranda



20241022_144006_photo
Taken on Oct 22, 2024, 2:40 PM EDT
Added on Oct 22, 2024, 2:40 PM EDT
Added by Dominic Miranda



20241022_144336_photo
Taken on Oct 22, 2024, 2:43 PM EDT
Added on Oct 22, 2024, 2:43 PM EDT
Added by Dominic Miranda



20241022_144352_photo
Taken on Oct 22, 2024, 2:43 PM EDT
Added on Oct 22, 2024, 2:44 PM EDT
Added by Dominic Miranda



20241022_144409_photo
Taken on Oct 22, 2024, 2:44 PM EDT
Added on Oct 22, 2024, 2:44 PM EDT
Added by Dominic Miranda

Form detail

#8: ELECTRICAL SYSTEM DAMAGE CHECKLIST

AECOM

Forms

Location	
Form date	Oct 22, 2024
Template	ELECTRICAL SYSTEM DAMAGE CHECKLIST
Description	
Due date	
Submitted by	**Dominic Miranda**
Status	Closed
Last update	Oct 31, 2024, 8:53 PM EDT
Last updated by	**Dominic Miranda**
Included references	Assets | Files | Forms | Issues | Photos | File Packages | Sheets | Markups on Sheets | Submittals | RFIs | PCOs | Schedule Activities

1. Electrical Systems Damage Check

1.1 System Description
TV,Audio, WiFi, DAS systems

1.2 Area / Room
Upper Press area (Radio Booths)

1.3 Visually Checked
(●) Yes ( ) No ( ) N/A

1.4 Damage

- [x] Yes
- [ ] No
- [ ] N/A

1.5 Operational

- [ ] Yes
- [x] No
- [ ] N/A

to be verified by certified technicians and electricians

1.6 NEMA

- [x] Yes
- [ ] No
- [ ] N/A

Nema 1

1.7 Notes/Other Comments

We noted several electrical and low voltage devices were exposed directly to rain-we recommended a thermal inspection . A full replacement as a safe measure for future reliability is recommended.

References and Attachments

Photos (5)



20241022_144852_photo
Taken on Oct 22, 2024, 2:48 PM EDT
Added on Oct 22, 2024, 2:49 PM EDT
Added by Dominic Miranda



20241022_144910_photo
Taken on Oct 22, 2024, 2:49 PM EDT
Added on Oct 22, 2024, 2:50 PM EDT
Added by Dominic Miranda



20241022_144958_photo
Taken on Oct 22, 2024, 2:49 PM EDT
Added on Oct 22, 2024, 2:50 PM EDT
Added by Dominic Miranda



20241022_145014_photo
Taken on Oct 22, 2024, 2:50 PM EDT
Added on Oct 22, 2024, 2:50 PM EDT
Added by Dominic Miranda

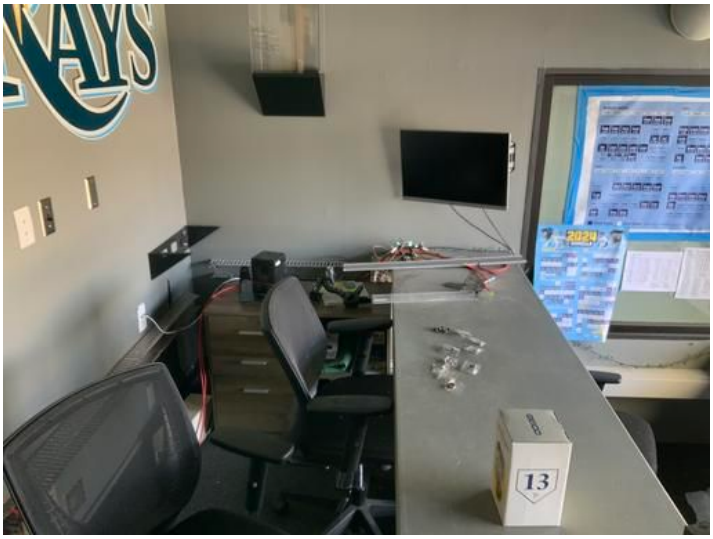

20241022_145028_photo
Taken on Oct 22, 2024, 2:50 PM EDT
Added on Oct 22, 2024, 2:50 PM EDT
Added by Dominic Miranda

Form detail

#10: ELECTRICAL SYSTEM DAMAGE CHECKLIST

AECOM

Forms

Location	
Form date	Oct 22, 2024
Template	ELECTRICAL SYSTEM DAMAGE CHECKLIST
Description	
Due date	
Submitted by	**Dominic Miranda**
Status	Closed
Last update	Oct 31, 2024, 9:00 PM EDT
Last updated by	**Dominic Miranda**
Included references	Assets | Files | Forms | Issues | Photos | File Packages | Sheets | Markups on Sheets | Submittals | RFIs | PCOs | Schedule Activities

1. Electrical Systems Damage Check

1.1 System Description
Electrical

1.2 Area / Room
Upper press level (TV and Radio Booths)

1.3 Visually Checked
(●) Yes ( ) No ( ) N/A

1.4 Damage

- [x] Yes
- [ ] No
- [ ] N/A

1.5 Operational

- [ ] Yes
- [x] No
- [ ] N/A

to be inspected by electricians for water contamination inside the electrical devices

1.6 NEMA

- [x] Yes
- [ ] No
- [ ] N/A

Nema 1

1.7 Notes/Other Comments

Several electrical outlets were noted damp and possible contaminated with water -Recommend a fully inspection prior to energized.

References and Attachments

Photos (2)

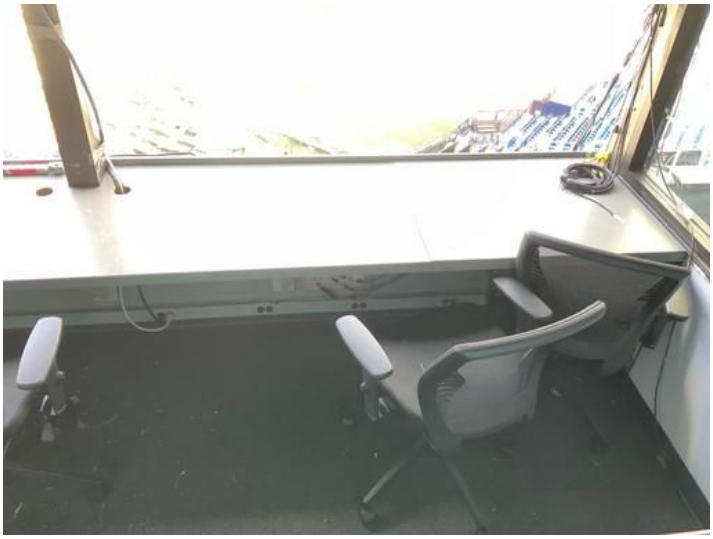

20241022_145317_photo
Taken on Oct 22, 2024, 2:53 PM EDT
Added on Oct 22, 2024, 2:53 PM EDT
Added by Dominic Miranda

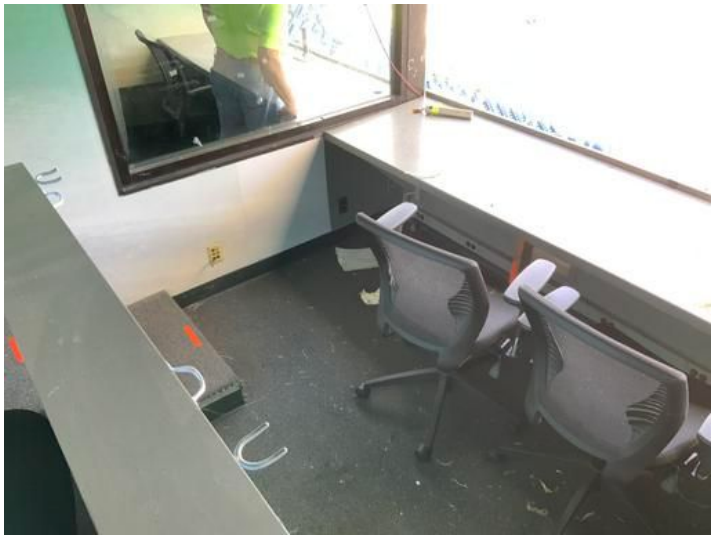

20241022_145331_photo
Taken on Oct 22, 2024, 2:53 PM EDT
Added on Oct 22, 2024, 2:53 PM EDT
Added by Dominic Miranda

Form detail

#11: ELECTRICAL SYSTEM DAMAGE CHECKLIST

AECOM

Forms

Location	
Form date	Oct 22, 2024
Template	ELECTRICAL SYSTEM DAMAGE CHECKLIST
Description	
Due date	
Submitted by	**Dominic Miranda**
Status	Closed
Last update	Oct 31, 2024, 9:04 PM EDT
Last updated by	**Dominic Miranda**
Included references	Assets | Files | Forms | Issues | Photos | File Packages | Sheets | Markups on Sheets | Submittals | RFIs | PCOs | Schedule Activities

1. Electrical Systems Damage Check

1.1 System Description
Electrical

1.2 Area / Room
C Riser -3rd Floor

1.3 Visually Checked
(●) Yes ( ) No ( ) N/A

1.4 Damage

Yes ○ No ● N/A ○

1.5 Operational

Yes ● No ○ N/A ○

1.6 NEMA

Yes ● No ○ N/A ○

Nema 1

1.7 Notes/Other Comments

Recommend the riser feeders be tested for safety

Form detail

#12: ELECTRICAL SYSTEM DAMAGE CHECKLIST

Forms

Location	
Form date	Oct 22, 2024
Template	ELECTRICAL SYSTEM DAMAGE CHECKLIST
Description	
Due date	
Submitted by	**Dominic Miranda**
Status	Closed
Last update	Oct 31, 2024, 9:07 PM EDT
Last updated by	**Dominic Miranda**
Included references	Assets | Files | Forms | Issues | Photos | File Packages | Sheets | Markups on Sheets | Submittals | RFIs | PCOs | Schedule Activities

1. Electrical Systems Damage Check

1.1 System Description
Electrical

Photos (1)

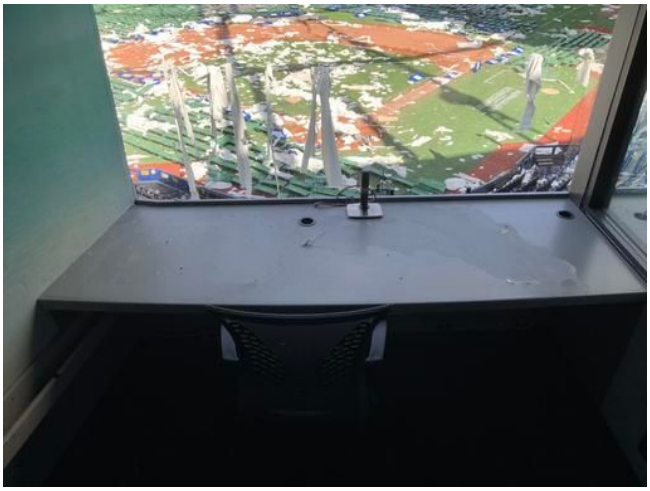

20241022_145626_photo
Taken on Oct 22, 2024, 2:56 PM EDT
Added on Oct 22, 2024, 2:56 PM EDT
Added by Dominic Miranda

1.2 Area / Room
C Riser (2nd Floor)

1.3 Visually Checked
(●) Yes ( ) No ( ) N/A

1.4 Damage
( ) Yes (●) No ( ) N/A

1.5 Operational
(●) Yes ( ) No ( ) N/A

1.6 NEMA
(●) Yes ( ) No ( ) N/A

Nema 1

1.7 Notes/Other Comments
Recommend the riser feeders be tested for safety

Form detail

#13: ELECTRICAL SYSTEM DAMAGE CHECKLIST

AECOM

Forms

Location	
Form date	Oct 22, 2024
Template	ELECTRICAL SYSTEM DAMAGE CHECKLIST
Description	
Due date	
Submitted by	**Dominic Miranda**
Status	Closed
Last update	Oct 31, 2024, 9:24 PM EDT
Last updated by	**Dominic Miranda**
Included references	Assets | Files | Forms | Issues | Photos | File Packages | Sheets | Markups on Sheets | Submittals | RFIs | PCOs | Schedule Activities

1. Electrical Systems Damage Check

1.1 System Description
Audio/Video

1.2 Area / Room
Video Production Room (5th Floor)

1.3 Visually Checked
(●) Yes ( ) No ( ) N/A

1.4 Damage

Yes ○ No ○ N/A

1.5 Operational

○ Yes ● No ○ N/A

To be verified by certified by Video Technician and production directors

1.6 NEMA

○ Yes ● No ○ N/A

1.7 Notes/Other Comments

The upfront of the system, including the Audio Matrix, was exposed directly to water. It is possible that additional hardware in the back room was dampened with water. Video Replay systems are very complex and electronic-driven components that should never be exposed to excess humidity. After further review with a professional audio engineer, I recommend a complete replacement.

References and Attachments

Photos (4)



20241022_150020_photo
Taken on Oct 22, 2024, 3:00 PM EDT
Added on Oct 22, 2024, 3:01 PM EDT
Added by Dominic Miranda



20241022_150133_photo
Taken on Oct 22, 2024, 3:01 PM EDT
Added on Oct 22, 2024, 3:01 PM EDT
Added by Dominic Miranda



20241022_150152_photo
Taken on Oct 22, 2024, 3:01 PM EDT
Added on Oct 22, 2024, 3:02 PM EDT
Added by Dominic Miranda



20241022_150216_photo
Taken on Oct 22, 2024, 3:02 PM EDT
Added on Oct 22, 2024, 3:02 PM EDT
Added by Dominic Miranda

Form detail

#14: ELECTRICAL SYSTEM DAMAGE CHECKLIST

AECOM

Forms

Location	
Form date	Oct 22, 2024
Template	ELECTRICAL SYSTEM DAMAGE CHECKLIST
Description	
Due date	
Submitted by	**Dominic Miranda**
Status	Closed
Last update	Oct 31, 2024, 9:33 PM EDT
Last updated by	**Dominic Miranda**
Included references	Assets | Files | Forms | Issues | Photos | File Packages | Sheets | Markups on Sheets | Submittals | RFIs | PCOs | Schedule Activities

1. Electrical Systems Damage Check

1.1 System Description
Electrical

1.2 Area / Room
C-Riser 3th Floor

1.3 Visually Checked
(●) Yes ( ) No ( ) N/A

1.4 Damage

- ○ Yes
- ◉ No
- ○ N/A

1.5 Operational

- ◉ Yes
- ○ No
- ○ N/A

1.6 NEMA

- ◉ Yes
- ○ No
- ○ N/A

Nema 1

1.7 Notes/Other Comments

Recommend riser feeders be tested for safety

Form detail

#15: ELECTRICAL SYSTEM DAMAGE CHECKLIST

AECOM

Forms

Location	
Form date	Oct 23, 2024
Template	ELECTRICAL SYSTEM DAMAGE CHECKLIST
Description	
Due date	
Submitted by	**Dominic Miranda**
Status	Closed
Last update	Oct 31, 2024, 9:37 PM EDT
Last updated by	**Dominic Miranda**
Included references	Assets | Files | Forms | Issues | Photos | File Packages | Sheets | Markups on Sheets | Submittals | RFIs | PCOs | Schedule Activities

1. Electrical Systems Damage Check

1.1 System Description
Main Scoreboard

1.2 Area / Room
Outfield

1.3 Visually Checked
(●) Yes ( ) No ( ) N/A

1.4 Damage

○ Yes ◉ No ○ N/A

1.5 Operational

○ Yes ○ No ◉ N/A

to be tested by the system certified manufactory

1.6 NEMA

◉ Yes ○ No ○ N/A

NEMA 1

1.7 Notes/Other Comments

Main Dristibution Panel and sub panels are NEMA 1 -Appears the Equipment was exposed to rain however there was no indication of damage to the electrical equipment. Recommend to be tested for safety

References and Attachments

Photos (6)



20241023_103955_photo
Taken on Oct 23, 2024, 10:39 AM EDT
Added on Oct 23, 2024, 10:40 AM EDT
Added by Dominic Miranda



20241023_104023_photo
Taken on Oct 23, 2024, 10:40 AM EDT
Added on Oct 23, 2024, 10:41 AM EDT
Added by Dominic Miranda



20241023_104117_photo
Taken on Oct 23, 2024, 10:41 AM EDT
Added on Oct 23, 2024, 10:41 AM EDT
Added by Dominic Miranda



20241023_104244_photo
Taken on Oct 23, 2024, 10:42 AM EDT
Added on Oct 23, 2024, 10:42 AM EDT
Added by Dominic Miranda



20241023_104138_photo
Taken on Oct 23, 2024, 10:41 AM EDT
Added on Oct 23, 2024, 10:42 AM EDT
Added by Dominic Miranda



20241023_104333_photo
Taken on Oct 23, 2024, 10:43 AM EDT
Added on Oct 23, 2024, 10:43 AM EDT
Added by Dominic Miranda

Form detail

#16: ELECTRICAL SYSTEM DAMAGE CHECKLIST

AECOM

Forms

Location	
Form date	Oct 23, 2024
Template	ELECTRICAL SYSTEM DAMAGE CHECKLIST
Description	
Due date	
Submitted by	**Dominic Miranda**
Status	Closed
Last update	Oct 31, 2024, 9:40 PM EDT
Last updated by	**Dominic Miranda**
Included references	Assets | Files | Forms | Issues | Photos | File Packages | Sheets | Markups on Sheets | Submittals | RFIs | PCOs | Schedule Activities

1. Electrical Systems Damage Check

1.1 System Description
Electrical

1.2 Area / Room
C-Riser -4th Floor

1.3 Visually Checked
(●) Yes ( ) No ( ) N/A

1.4 Damage

- ○ Yes
- ◉ No
- ○ N/A

1.5 Operational

- ◉ Yes
- ○ No
- ○ N/A

1.6 NEMA

- ◉ Yes
- ○ No
- ○ N/A

Nema 1

1.7 Notes/Other Comments

Recommend test feeders for safety

Form detail

#17: ELECTRICAL SYSTEM DAMAGE CHECKLIST

AECOM

Forms

Location	
Form date	Oct 23, 2024
Template	ELECTRICAL SYSTEM DAMAGE CHECKLIST
Description	
Due date	
Submitted by	**Dominic Miranda**
Status	Closed
Last update	Nov 3, 2024, 3:27 AM EST
Last updated by	**Dominic Miranda**
Included references	Assets | Files | Forms | Issues | Photos | File Packages | Sheets | Markups on Sheets | Submittals | RFIs | PCOs | Schedule Activities

1. Electrical Systems Damage Check

1.1 System Description
Electrical

1.2 Area / Room
Catwalk

1.3 Visually Checked
(●) Yes ( ) No ( ) N/A

1.4 Damage

Yes ● No N/A

1.5 Operational

Yes ● No N/A

1.6 NEMA

● Yes No N/A

Photos (1)



20241023_131817_photo
Taken on Oct 23, 2024, 1:18 PM EDT
Added on Oct 23, 2024, 1:22 PM EDT
Added by Dominic Miranda

NEMA 1

1.7 Notes/Other Comments

Water was noted inside the panelboard (Photo). Recommend test for phase to ground short and possible replace for QA

References and Attachments

Photos (3)



20241023_131852_photo
Taken on Oct 23, 2024, 1:18 PM EDT
Added on Oct 23, 2024, 1:22 PM EDT
Added by Dominic Miranda



20241023_131959_photo
Taken on Oct 23, 2024, 1:19 PM EDT
Added on Oct 23, 2024, 1:22 PM EDT
Added by Dominic Miranda



20241023_132028_photo
Taken on Oct 23, 2024, 1:20 PM EDT
Added on Oct 23, 2024, 1:22 PM EDT
Added by Dominic Miranda

Form detail

#18: ELECTRICAL SYSTEM DAMAGE CHECKLIST

AECOM

Forms

Location	
Form date	Oct 23, 2024
Template	ELECTRICAL SYSTEM DAMAGE CHECKLIST
Description	
Due date	
Submitted by	**Dominic Miranda**
Status	Closed
Last update	Nov 3, 2024, 3:24 AM EST
Last updated by	**Dominic Miranda**
Included references	Assets | Files | Forms | Issues | Photos | File Packages | Sheets | Markups on Sheets | Submittals | RFIs | PCOs | Schedule Activities

1. Electrical Systems Damage Check

1.1 System Description
Low Voltage Systems

1.2 Area / Room
Catwalk

1.3 Visually Checked
(●) Yes ( ) No ( ) N/A

1.4 Damage

- [x] Yes
- [ ] No
- [ ] N/A

1.5 Operational

- [ ] Yes
- [x] No
- [ ] N/A

1.6 NEMA

- [ ] Yes
- [x] No
- [ ] N/A

1.7 Notes/Other Comments

Low Voltage cable tray damage was noted (see photo). Additionally, several systems,(MB3) broadcast and small UPS were exposed to rain and deemed to be damaged

References and Attachments

Photos (5)



20241023_132550_photo
Taken on Oct 23, 2024, 1:25 PM EDT
Added on Oct 23, 2024, 1:26 PM EDT
Added by Dominic Miranda



20241023_132626_photo
Taken on Oct 23, 2024, 1:26 PM EDT
Added on Oct 23, 2024, 1:27 PM EDT
Added by Dominic Miranda



20241023_132625_photo
Taken on Oct 23, 2024, 1:26 PM EDT
Added on Oct 23, 2024, 1:27 PM EDT
Added by Dominic Miranda



20241023_132751_photo
Taken on Oct 23, 2024, 1:27 PM EDT
Added on Oct 23, 2024, 1:28 PM EDT
Added by Dominic Miranda



20241023_133223_photo
Taken on Oct 23, 2024, 1:32 PM EDT
Added on Oct 23, 2024, 1:32 PM EDT
Added by Dominic Miranda

Form detail

#19: ELECTRICAL SYSTEM DAMAGE CHECKLIST

AECOM

Forms

Location	
Form date	Oct 23, 2024
Template	ELECTRICAL SYSTEM DAMAGE CHECKLIST
Description	
Due date	
Submitted by	**Dominic Miranda**
Status	Closed
Last update	Oct 31, 2024, 9:49 PM EDT
Last updated by	**Dominic Miranda**
Included references	Assets | Files | Forms | Issues | Photos | File Packages | Sheets | Markups on Sheets | Submittals | RFIs | PCOs | Schedule Activities

1. Electrical Systems Damage Check

1.1 System Description
Electrical

1.2 Area / Room
C-Riser (5th Floor)

1.3 Visually Checked
(●) Yes ( ) No ( ) N/A

1.4 Damage

○ Yes ◉ No ○ N/A

Photos (2)



20241023_134247_photo
Taken on Oct 23, 2024, 1:42 PM EDT
Added on Oct 23, 2024, 1:43 PM EDT
Added by Dominic Miranda



20241023_134357_photo
Taken on Oct 23, 2024, 1:43 PM EDT
Added on Oct 23, 2024, 1:44 PM EDT
Added by Dominic Miranda

water in noted inside the glass housing.

1.5 Operational

◉ Yes ○ No ○ N/A

1.6 NEMA

◉ Yes ○ No ○ N/A

Nema 1

1.7 Notes/Other Comments

Recommend the feeders be tested for safety

Form detail

#20: ELECTRICAL SYSTEM DAMAGE CHECKLIST

AECOM

Forms

Location	
Form date	Oct 23, 2024
Template	ELECTRICAL SYSTEM DAMAGE CHECKLIST
Description	
Due date	
Submitted by	**Dominic Miranda**
Status	Closed
Last update	Nov 3, 2024, 3:36 AM EST
Last updated by	**Dominic Miranda**
Included references	Assets | Files | Forms | Issues | Photos | File Packages | Sheets | Markups on Sheets | Submittals | RFIs | PCOs | Schedule Activities

1. Electrical Systems Damage Check

1.1 System Description
Sports Lights

1.2 Area / Room
Catwalk

1.3 Visually Checked
(●) Yes ( ) No ( ) N/A

1.4 Damage

- [ ] Yes
- [x] No
- [ ] N/A

1.5 Operational

- [x] Yes
- [ ] No
- [ ] N/A

1.6 NEMA

- [x] Yes
- [ ] No
- [ ] N/A

1.7 Notes/Other Comments

The lights are NEMA 3, and water damage was not noticed inside the housing - we recommend a complete test for QA

References and Attachments

Photos (2)



20241023_134931_photo
Taken on Oct 23, 2024, 1:49 PM EDT
Added on Oct 23, 2024, 1:50 PM EDT
Added by Dominic Miranda

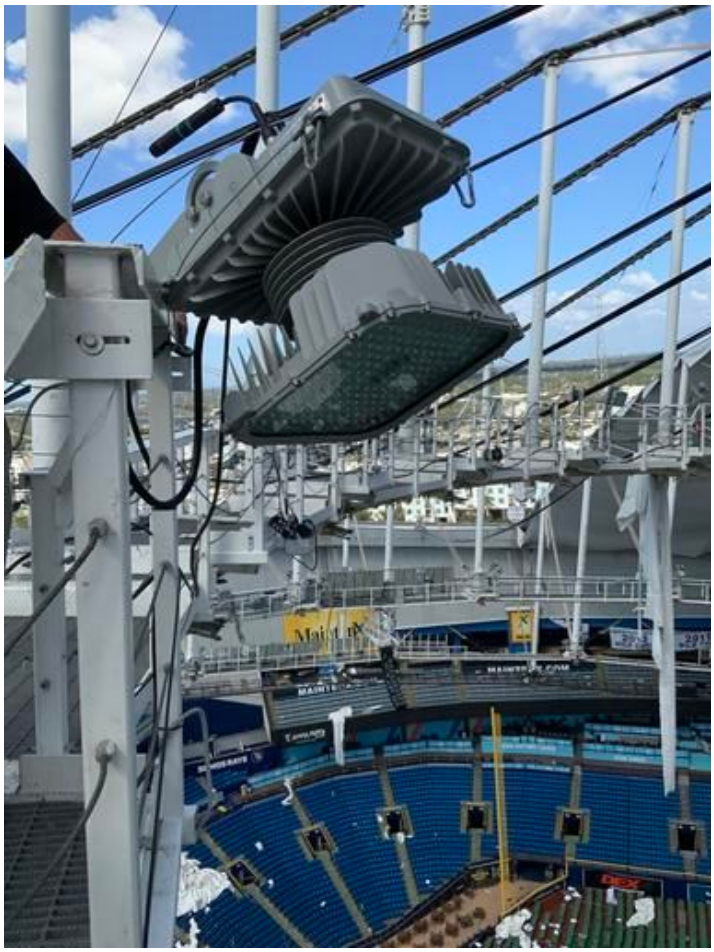

20241023_135015_photo
Taken on Oct 23, 2024, 1:50 PM EDT
Added on Oct 23, 2024, 1:50 PM EDT
Added by Dominic Miranda

Form detail

#21: ELECTRICAL SYSTEM DAMAGE CHECKLIST

AECOM

Forms

Location	
Form date	Oct 23, 2024
Template	ELECTRICAL SYSTEM DAMAGE CHECKLIST
Description	
Due date	
Submitted by	**Dominic Miranda**
Status	Closed
Last update	Oct 31, 2024, 9:51 PM EDT
Last updated by	**Dominic Miranda**
Included references	Assets | Files | Forms | Issues | Photos | File Packages | Sheets | Markups on Sheets | Submittals | RFIs | PCOs | Schedule Activities

1. Electrical Systems Damage Check

1.1 System Description
Electrical

1.2 Area / Room
Catwalk

1.3 Visually Checked
(●) Yes ( ) No ( ) N/A

1.4 Damage

- [x] Yes
- [ ] No
- [ ] N/A

1.5 Operational

- [x] Yes
- [ ] No
- [ ] N/A

1.6 NEMA

- [x] Yes
- [ ] No
- [ ] N/A

NEMA-1

1.7 Notes/Other Comments

Water drips were noted inside the equipment housing. It is recommended that it be tested prior to being energized.

References and Attachments

Photos (12)



20241023_141238_photo
Taken on Oct 23, 2024, 2:12 PM EDT
Added on Oct 23, 2024, 2:15 PM EDT
Added by Dominic Miranda



20241023_141317_photo
Taken on Oct 23, 2024, 2:13 PM EDT
Added on Oct 23, 2024, 2:16 PM EDT
Added by Dominic Miranda



20241023_141340_photo
Taken on Oct 23, 2024, 2:13 PM EDT
Added on Oct 23, 2024, 2:16 PM EDT
Added by Dominic Miranda



20241023_143837_photo
Taken on Oct 23, 2024, 2:38 PM EDT
Added on Oct 23, 2024, 2:38 PM EDT
Added by Dominic Miranda



20241023_143855_photo
Taken on Oct 23, 2024, 2:38 PM EDT
Added on Oct 23, 2024, 2:39 PM EDT
Added by Dominic Miranda



20241023_143915_photo
Taken on Oct 23, 2024, 2:39 PM EDT
Added on Oct 23, 2024, 2:39 PM EDT
Added by Dominic Miranda



20241023_143929_photo
Taken on Oct 23, 2024, 2:39 PM EDT
Added on Oct 23, 2024, 2:39 PM EDT
Added by Dominic Miranda



20241023_143951_photo
Taken on Oct 23, 2024, 2:39 PM EDT
Added on Oct 23, 2024, 2:40 PM EDT
Added by Dominic Miranda



20241023_144017_photo
Taken on Oct 23, 2024, 2:40 PM EDT
Added on Oct 23, 2024, 2:40 PM EDT
Added by Dominic Miranda



20241023_144042_photo
Taken on Oct 23, 2024, 2:40 PM EDT
Added on Oct 23, 2024, 2:40 PM EDT
Added by Dominic Miranda



20241023_144112_photo
Taken on Oct 23, 2024, 2:41 PM EDT
Added on Oct 23, 2024, 2:46 PM EDT
Added by Dominic Miranda



20241023_144136_photo
Taken on Oct 23, 2024, 2:41 PM EDT
Added on Oct 23, 2024, 2:46 PM EDT
Added by Dominic Miranda

Form detail

#22: ELECTRICAL SYSTEM DAMAGE CHECKLIST

AECOM

Forms

Location	
Form date	Oct 23, 2024
Template	ELECTRICAL SYSTEM DAMAGE CHECKLIST
Description	
Due date	
Submitted by	**Dominic Miranda**
Status	Closed
Last update	Oct 31, 2024, 9:55 PM EDT
Last updated by	**Dominic Miranda**
Included references	Assets | Files | Forms | Issues | Photos | File Packages | Sheets | Markups on Sheets | Submittals | RFIs | PCOs | Schedule Activities

1. Electrical Systems Damage Check

1.1 System Description
Audio array speakers

1.2 Area / Room
Catwalk

1.3 Visually Checked
(●) Yes ( ) No ( ) N/A

1.4 Damage

- [x] Yes
- [ ] No
- [ ] N/A

direct exposure during to the rainstorm

1.5 Operational

- [ ] Yes
- [ ] No
- [x] N/A

The system was not operational, and an audio engineer will need to verify it.

1.6 NEMA

- [ ] Yes
- [x] No
- [ ] N/A

1.7 Notes/Other Comments

As stated in prior observations, an audio engineer will be required to test/verify the entire system for damage.

References and Attachments

Photos (2)



20241023_142135_photo
Taken on Oct 23, 2024, 2:21 PM EDT
Added on Oct 23, 2024, 2:21 PM EDT
Added by Dominic Miranda



20241023_142212_photo
Taken on Oct 23, 2024, 2:22 PM EDT
Added on Oct 23, 2024, 2:22 PM EDT
Added by Dominic Miranda

Form detail

#23: ELECTRICAL SYSTEM DAMAGE CHECKLIST

AECOM

Forms

Location	
Form date	Oct 23, 2024
Template	ELECTRICAL SYSTEM DAMAGE CHECKLIST
Description	
Due date	
Submitted by	**Dominic Miranda**
Status	Closed
Last update	Oct 31, 2024, 9:59 PM EDT
Last updated by	**Dominic Miranda**
Included references	Assets | Files | Forms | Issues | Photos | File Packages | Sheets | Markups on Sheets | Submittals | RFIs | PCOs | Schedule Activities

1. Electrical Systems Damage Check

1.1 System Description
Sports lighting

1.2 Area / Room
Catwalk

1.3 Visually Checked
(●) Yes ( ) No ( ) N/A

1.4 Damage

- ○ Yes
- ◉ No
- ○ N/A

1.5 Operational

- ○ Yes
- ○ No
- ◉ N/A

unknown until the system is activated

1.6 NEMA

- ◉ Yes
- ○ No
- ○ N/A

1.7 Notes/Other Comments

The system must be quality-improved by certified technicians before energization.

References and Attachments

Photos (2)



20241023_142515_photo
Taken on Oct 23, 2024, 2:25 PM EDT
Added on Oct 23, 2024, 2:25 PM EDT
Added by Dominic Miranda



20241023_142531_photo
Taken on Oct 23, 2024, 2:25 PM EDT
Added on Oct 23, 2024, 2:25 PM EDT
Added by Dominic Miranda

Form detail

#24: ELECTRICAL SYSTEM DAMAGE CHECKLIST

AECOM

Forms

Location	
Form date	Oct 23, 2024
Template	ELECTRICAL SYSTEM DAMAGE CHECKLIST
Description	
Due date	
Submitted by	**Dominic Miranda**
Status	Closed
Last update	Oct 31, 2024, 10:01 PM EDT
Last updated by	**Dominic Miranda**
Included references	Assets | Files | Forms | Issues | Photos | File Packages | Sheets | Markups on Sheets | Submittals | RFIs | PCOs | Schedule Activities

1. Electrical Systems Damage Check

1.1 System Description
Radio antena

1.2 Area / Room
Catwalk

1.3 Visually Checked
(●) Yes ( ) No ( ) N/A

1.4 Damage

- ○ Yes
- ◉ No
- ○ N/A

1.5 Operational

- ○ Yes
- ○ No
- ◉ N/A

unknown until verified with the system active

1.6 NEMA

- ○ Yes
- ◉ No
- ○ N/A

1.7 Notes/Other Comments

I recommend that a radio engineer review the system for quality assurance performance.

References and Attachments

Photos (3)



20241023_143000_photo
Taken on Oct 23, 2024, 2:30 PM EDT
Added on Oct 23, 2024, 2:30 PM EDT
Added by Dominic Miranda



20241023_142947_photo
Taken on Oct 23, 2024, 2:29 PM EDT
Added on Oct 23, 2024, 2:30 PM EDT
Added by Dominic Miranda

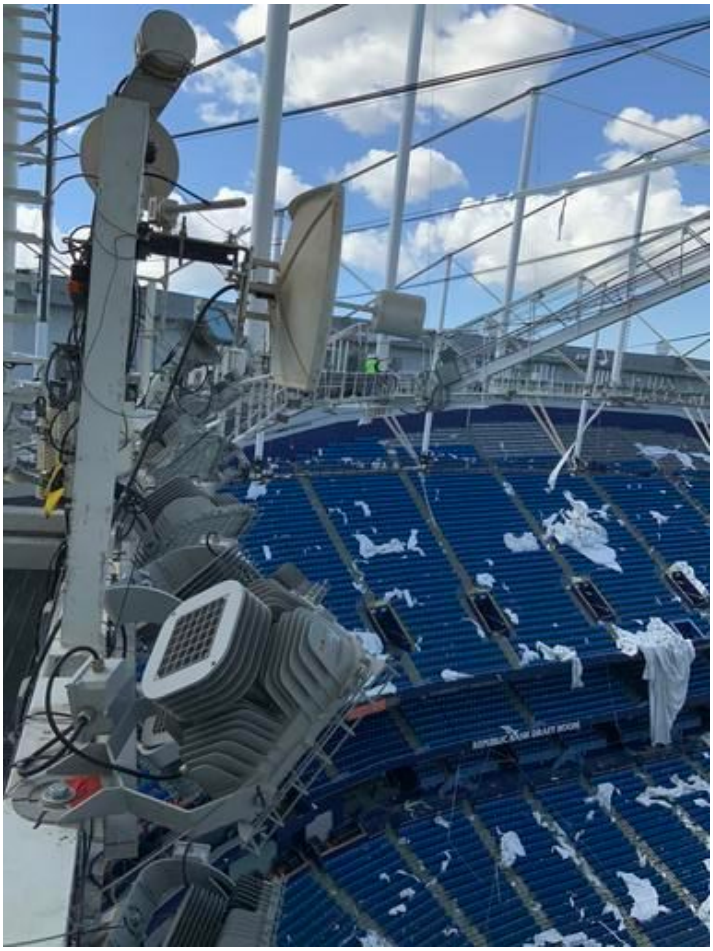

20241023_143031_photo
Taken on Oct 23, 2024, 2:30 PM EDT
Added on Oct 23, 2024, 2:30 PM EDT
Added by Dominic Miranda

Form detail

#25: ELECTRICAL SYSTEM DAMAGE CHECKLIST

AECOM

Forms

Location	
Form date	Oct 23, 2024
Template	ELECTRICAL SYSTEM DAMAGE CHECKLIST
Description	
Due date	
Submitted by	**Dominic Miranda**
Status	Closed
Last update	Oct 31, 2024, 10:03 PM EDT
Last updated by	**Dominic Miranda**
Included references	Assets | Files | Forms | Issues | Photos | File Packages | Sheets | Markups on Sheets | Submittals | RFIs | PCOs | Schedule Activities

1. Electrical Systems Damage Check

1.1 System Description
Microwave radio

1.2 Area / Room
Catwalk

1.3 Visually Checked
(●) Yes ( ) No ( ) N/A

1.4 Damage

○ Yes ◉ No ○ N/A

1.5 Operational

○ Yes ○ No ◉ N/A

unknown until the system is active.

1.6 NEMA

○ Yes ◉ No ○ N/A

1.7 Notes/Other Comments

I recommend that a radio engineer review the system for performance.

References and Attachments

Photos (3)



20241023_143300_photo
Taken on Oct 23, 2024, 2:33 PM EDT
Added on Oct 23, 2024, 2:33 PM EDT
Added by Dominic Miranda



20241023_143325_photo
Taken on Oct 23, 2024, 2:33 PM EDT
Added on Oct 23, 2024, 2:33 PM EDT
Added by Dominic Miranda



20241023_143352_photo
Taken on Oct 23, 2024, 2:33 PM EDT
Added on Oct 23, 2024, 2:34 PM EDT
Added by Dominic Miranda

Form detail

#26: ELECTRICAL SYSTEM DAMAGE CHECKLIST

AECOM

Forms

Location	
Form date	Oct 23, 2024
Template	ELECTRICAL SYSTEM DAMAGE CHECKLIST
Description	
Due date	
Submitted by	**Dominic Miranda**
Status	Closed
Last update	Oct 31, 2024, 10:05 PM EDT
Last updated by	**Dominic Miranda**
Included references	Assets | Files | Forms | Issues | Photos | File Packages | Sheets | Markups on Sheets | Submittals | RFIs | PCOs | Schedule Activities

1. Electrical Systems Damage Check

1.1 System Description
DAS

1.2 Area / Room
Catwalk

1.3 Visually Checked
(●) Yes ( ) No ( ) N/A

1.4 Damage

○ Yes ◉ No ○ N/A

1.5 Operational

○ Yes ○ No ◉ N/A

Photos (2)



20241023_144445_photo
Taken on Oct 23, 2024, 2:44 PM EDT
Added on Oct 23, 2024, 2:46 PM EDT
Added by Dominic Miranda



20241023_144506_photo
Taken on Oct 23, 2024, 2:45 PM EDT
Added on Oct 23, 2024, 2:46 PM EDT
Added by Dominic Miranda

1.6 NEMA

○ Yes ○ No ◉ N/A

1.7 Notes/Other Comments

The system housing has a cover with open slots that water was able to penetrate inside the electronics-Recommend to be tested by the DAS engineer

Form detail

#27: ELECTRICAL SYSTEM DAMAGE CHECKLIST

AECOM

Forms

Location	
Form date	Oct 23, 2024
Template	ELECTRICAL SYSTEM DAMAGE CHECKLIST
Description	
Due date	
Submitted by	**Dominic Miranda**
Status	Closed
Last update	Oct 31, 2024, 10:08 PM EDT
Last updated by	**Dominic Miranda**
Included references	Assets | Files | Forms | Issues | Photos | File Packages | Sheets | Markups on Sheets | Submittals | RFIs | PCOs | Schedule Activities

1. Electrical Systems Damage Check

1.1 System Description
Electrical

1.2 Area / Room
Catwalk

1.3 Visually Checked
(●) Yes ( ) No ( ) N/A

1.4 Damage

- [x] Yes
- [ ] No
- [ ] N/A

1.5 Operational

- [ ] Yes
- [ ] No
- [x] N/A

unknown until power is restored

1.6 NEMA

- [x] Yes
- [ ] No
- [ ] N/A

Nema 1

1.7 Notes/Other Comments

Recommend all panels be verified for shorts and grounds before energization

References and Attachments

Photos (8)



20241023_145422_photo
Taken on Oct 23, 2024, 2:54 PM EDT
Added on Oct 23, 2024, 2:54 PM EDT
Added by Dominic Miranda



20241023_145454_photo
Taken on Oct 23, 2024, 2:54 PM EDT
Added on Oct 23, 2024, 2:55 PM EDT
Added by Dominic Miranda



20241023_145515_photo
Taken on Oct 23, 2024, 2:55 PM EDT
Added on Oct 23, 2024, 2:55 PM EDT
Added by Dominic Miranda



20241023_145530_photo
Taken on Oct 23, 2024, 2:55 PM EDT
Added on Oct 23, 2024, 2:55 PM EDT
Added by Dominic Miranda



20241023_145547_photo
Taken on Oct 23, 2024, 2:55 PM EDT
Added on Oct 23, 2024, 2:55 PM EDT
Added by Dominic Miranda



20241023_145602_photo
Taken on Oct 23, 2024, 2:56 PM EDT
Added on Oct 23, 2024, 2:56 PM EDT
Added by Dominic Miranda



20241023_145620_photo
Taken on Oct 23, 2024, 2:56 PM EDT
Added on Oct 23, 2024, 2:56 PM EDT
Added by Dominic Miranda



20241023_145657_photo
Taken on Oct 23, 2024, 2:56 PM EDT
Added on Oct 23, 2024, 2:57 PM EDT
Added by Dominic Miranda

Form detail

#28: ELECTRICAL SYSTEM DAMAGE CHECKLIST

AECOM

Forms

Location	
Form date	Oct 23, 2024
Template	ELECTRICAL SYSTEM DAMAGE CHECKLIST
Description	
Due date	
Submitted by	**Dominic Miranda**
Status	Closed
Last update	Oct 31, 2024, 10:11 PM EDT
Last updated by	**Dominic Miranda**
Included references	Assets | Files | Forms | Issues | Photos | File Packages | Sheets | Markups on Sheets | Submittals | RFIs | PCOs | Schedule Activities

1. Electrical Systems Damage Check

1.1 System Description
Sports lighting

1.2 Area / Room
Catwalk - lights attached to a pole

1.3 Visually Checked
(●) Yes ( ) No ( ) N/A

1.4 Damage

- [x] Yes
- [ ] No
- [ ] N/A

1.5 Operational

- [ ] Yes
- [ ] No
- [x] N/A

unknown until the system is activated

1.6 NEMA

- [x] Yes
- [ ] No
- [ ] N/A

1.7 Notes/Other Comments

The light frame was noted to be damaged by wind force.

References and Attachments

Photos (1)



20241023_145949_photo
Taken on Oct 23, 2024, 2:59 PM EDT
Added on Oct 23, 2024, 3:00 PM EDT
Added by Dominic Miranda

Form detail

#29: ELECTRICAL SYSTEM DAMAGE CHECKLIST

AECOM

Forms

Location	
Form date	Oct 23, 2024
Template	ELECTRICAL SYSTEM DAMAGE CHECKLIST
Description	
Due date	
Submitted by	**Dominic Miranda**
Status	Closed
Last update	Oct 31, 2024, 10:15 PM EDT
Last updated by	**Dominic Miranda**
Included references	Assets | Files | Forms | Issues | Photos | File Packages | Sheets | Markups on Sheets | Submittals | RFIs | PCOs | Schedule Activities

1. Electrical Systems Damage Check

1.1 System Description
Electrical

1.2 Area / Room
Catwalk

1.3 Visually Checked
(●) Yes ( ) No ( ) N/A

1.4 Damage

Yes ○ No ● N/A

1.5 Operational

Yes ○ No ○ N/A ●

unknown until the power is restored

1.6 NEMA

Yes ● No ○ N/A ○

Nema 1

1.7 Notes/Other Comments

As noted, an open grate was pointed out on the front of the panelboard-water may have penetrated inside the bus -It is recommended to be tested for short and ground safety

References and Attachments

Photos (1)



20241023_152107_photo
Taken on Oct 23, 2024, 3:21 PM EDT
Added on Oct 23, 2024, 3:21 PM EDT
Added by Dominic Miranda

Form detail

#30: ELECTRICAL SYSTEM DAMAGE CHECKLIST

AECOM

Forms

Location	
Form date	Oct 23, 2024
Template	ELECTRICAL SYSTEM DAMAGE CHECKLIST
Description	
Due date	
Submitted by	**Dominic Miranda**
Status	Closed
Last update	Oct 31, 2024, 10:19 PM EDT
Last updated by	**Dominic Miranda**
Included references	Assets | Files | Forms | Issues | Photos | File Packages | Sheets | Markups on Sheets | Submittals | RFIs | PCOs | Schedule Activities

1. Electrical Systems Damage Check

1.1 System Description
Audio Array Speaker

1.2 Area / Room
Play Field

1.3 Visually Checked
(●) Yes ( ) No ( ) N/A

1.4 Damage

- [x] Yes
- [ ] No
- [ ] N/A

1.5 Operational

- [ ] Yes
- [x] No
- [ ] N/A

1.6 NEMA

- [ ] Yes
- [ ] No
- [x] N/A

1.7 Notes/Other Comments

As noted, one of the Array Speakers was dismantled from the attached position to the playfield floor from the wind force.

References and Attachments

Photos (1)



20241023_152734_photo
Taken on Oct 23, 2024, 3:27 PM EDT
Added on Oct 23, 2024, 3:27 PM EDT
Added by Dominic Miranda

Form detail

#31: ELECTRICAL SYSTEM DAMAGE CHECKLIST

AECOM

Forms

Location	
Form date	Oct 23, 2024
Template	ELECTRICAL SYSTEM DAMAGE CHECKLIST
Description	
Due date	
Submitted by	**Dominic Miranda**
Status	Closed
Last update	Nov 3, 2024, 3:43 AM EST
Last updated by	**Dominic Miranda**
Included references	Assets | Files | Forms | Issues | Photos | File Packages | Sheets | Markups on Sheets | Submittals | RFIs | PCOs | Schedule Activities

1. Electrical Systems Damage Check

1.1 System Description
Electrical & Low Voltage Systems

1.2 Area / Room
Short Stop Bar Area

1.3 Visually Checked
(●) Yes ( ) No ( ) N/A

1.4 Damage

- [x] Yes
- [ ] No
- [ ] N/A

1.5 Operational

- [ ] Yes
- [x] No
- [ ] N/A

All system required to be tested for QA

1.6 NEMA

- [ ] Yes
- [x] No
- [ ] N/A

1.7 Notes/Other Comments

Several systems devices (TV, Lights' Power, Wifi, DAS, Fire Alarm) were directly exposed to rain. Recommend a full test and replacement as needed for QA

Form detail

#133: ELECTRICAL SYSTEM DAMAGE CHECKLIST

AECOM

Forms

Location	
Form date	Oct 29, 2024
Template	ELECTRICAL SYSTEM DAMAGE CHECKLIST
Description	
Due date	
Submitted by	**Dominic Miranda**
Status	Closed
Last update	Nov 3, 2024, 4:00 AM EST
Last updated by	**Dominic Miranda**
Included references	Assets | Files | Forms | Issues | Photos | File Packages | Sheets | Markups on Sheets | Submittals | RFIs | PCOs | Schedule Activities

1. Electrical Systems Damage Check

1.1 System Description
Electrical

1.2 Area / Room
Power Riser 1 (Playfield power circuits)

1.3 Visually Checked
(●) Yes ( ) No ( ) N/A

1.4 Damage

- [x] Yes
- [ ] No
- [ ] N/A

All circuits need to verified for QA-

1.5 Operational

- [ ] Yes
- [x] No
- [ ] N/A

Power was turned off for safety

1.6 NEMA

- [ ] Yes
- [x] No
- [ ] N/A

1.7 Notes/Other Comments

The power feeding the field outlets will need to be tested for QA

Form detail

#136: ELECTRICAL SYSTEM DAMAGE CHECKLIST

AECOM

Forms

Location	
Form date	Nov 3, 2024
Template	ELECTRICAL SYSTEM DAMAGE CHECKLIST
Description	
Due date	
Submitted by	**Dominic Miranda**
Status	Closed
Last update	Nov 3, 2024, 3:19 AM EST
Last updated by	**Dominic Miranda**
Included references	Assets | Files | Forms | Issues | Photos | File Packages | Sheets | Markups on Sheets | Submittals | RFIs | PCOs | Schedule Activities

1. Electrical Systems Damage Check

1.1 System Description
Electrical

1.2 Area / Room
C-Riser (Upper Mech Room)

1.3 Visually Checked
(●) Yes ( ) No ( ) N/A

1.4 Damage

Yes ○ No ● N/A ○

1.5 Operational

Yes ● No ○ N/A ○

1.6 NEMA

Yes ● No ○ N/A ○

Nema 1

1.7 Notes/Other Comments

Recommend an interior clean and phase verification for QA

Form detail

#137: ELECTRICAL SYSTEM DAMAGE CHECKLIST

AECOM

Forms

Location	
Form date	Nov 3, 2024
Template	ELECTRICAL SYSTEM DAMAGE CHECKLIST
Description	
Due date	
Submitted by	**Dominic Miranda**
Status	Closed
Last update	Nov 3, 2024, 4:01 AM EST
Last updated by	**Dominic Miranda**
Included references	Assets | Files | Forms | Issues | Photos | File Packages | Sheets | Markups on Sheets | Submittals | RFIs | PCOs | Schedule Activities

1. Electrical Systems Damage Check

1.1 System Description
Electrical

1.2 Area / Room
West Mechanical Room

1.3 Visually Checked
(●) Yes ( ) No ( ) N/A

1.4 Damage

Yes ○ No ● N/A ○

1.5 Operational

Yes ● No ○ N/A ○

1.6 NEMA

Yes ● No ○ N/A ○

Nema 1

1.7 Notes/Other Comments

Recommend to be tested for QA

Form detail

#138: ELECTRICAL SYSTEM DAMAGE CHECKLIST

AECOM

Forms

Location	
Form date	Nov 3, 2024
Template	ELECTRICAL SYSTEM DAMAGE CHECKLIST
Description	
Due date	
Submitted by	**Dominic Miranda**
Status	Closed
Last update	Nov 3, 2024, 4:04 AM EST
Last updated by	**Dominic Miranda**
Included references	Assets | Files | Forms | Issues | Photos | File Packages | Sheets | Markups on Sheets | Submittals | RFIs | PCOs | Schedule Activities

1. Electrical Systems Damage Check

1.1 System Description
Electrical

1.2 Area / Room
Mechanical Upper Concourse

1.3 Visually Checked
(●) Yes ( ) No ( ) N/A

1.4 Damage

	○ Yes	◉ No	○ N/A

1.5 Operational

◉ Yes	○ No	○ N/A

1.6 NEMA

◉ Yes	○ No	○ N/A

Nema 1

1.7 Notes/Other Comments

Recommend test for QA

Form detail

#139: ELECTRICAL SYSTEM DAMAGE CHECKLIST

AECOM

Forms

Location	
Form date	Nov 3, 2024
Template	ELECTRICAL SYSTEM DAMAGE CHECKLIST
Description	
Due date	
Submitted by	**Dominic Miranda**
Status	Closed
Last update	Nov 3, 2024, 4:08 AM EST
Last updated by	**Dominic Miranda**
Included references	Assets | Files | Forms | Issues | Photos | File Packages | Sheets | Markups on Sheets | Submittals | RFIs | PCOs | Schedule Activities

1. Electrical Systems Damage Check

1.1 System Description
Electrical

1.2 Area / Room
Elevator Machine Room South (elev-1)

1.3 Visually Checked
(●) Yes ( ) No ( ) N/A

1.4 Damage

○ Yes ◉ No ○ N/A

1.5 Operational

◉ Yes ○ No ○ N/A

1.6 NEMA

◉ Yes ○ No ○ N/A

Nema 1

1.7 Notes/Other Comments

Recommend a full test by Elevator specialized contractor

Form detail

#140: ELECTRICAL SYSTEM DAMAGE CHECKLIST

AECOM

Forms

Location	
Form date	Nov 3, 2024
Template	ELECTRICAL SYSTEM DAMAGE CHECKLIST
Description	
Due date	
Submitted by	**Dominic Miranda**
Status	Closed
Last update	Nov 3, 2024, 4:10 AM EST
Last updated by	**Dominic Miranda**
Included references	Assets | Files | Forms | Issues | Photos | File Packages | Sheets | Markups on Sheets | Submittals | RFIs | PCOs | Schedule Activities

1. Electrical Systems Damage Check

1.1 System Description
Electrical

1.2 Area / Room
D.A.R South-Mech Upper Concourse

1.3 Visually Checked
(●) Yes ( ) No ( ) N/A

1.4 Damage

○ Yes ◉ No ○ N/A

1.5 Operational

○ Yes ◉ No ○ N/A

The main circuit was turn off for safety

1.6 NEMA

◉ Yes ○ No ○ N/A

Nema 1

1.7 Notes/Other Comments

Recommend full test for QA

Form detail

#141: ELECTRICAL SYSTEM DAMAGE CHECKLIST

AECOM

Forms

Location	
Form date	Nov 3, 2024
Template	ELECTRICAL SYSTEM DAMAGE CHECKLIST
Description	
Due date	
Submitted by	**Dominic Miranda**
Status	Closed
Last update	Nov 3, 2024, 4:17 AM EST
Last updated by	**Dominic Miranda**
Included references	Assets | Files | Forms | Issues | Photos | File Packages | Sheets | Markups on Sheets | Submittals | RFIs | PCOs | Schedule Activities

1. Electrical Systems Damage Check

1.1 System Description
Audio System

1.2 Area / Room
Mech room Upper `Concourse

1.3 Visually Checked
(●) Yes ( ) No ( ) N/A

1.4 Damage

- [x] Yes
- [ ] No
- [ ] N/A

The system was turned off for the unknown field device conditions

1.5 Operational

- [ ] Yes
- [x] No
- [ ] N/A

TBD after a complete test for QA

1.6 NEMA

- [ ] Yes
- [x] No
- [ ] N/A

1.7 Notes/Other Comments

The system will need to be tested by an audio Engineer for QA

Form detail

#142: ELECTRICAL SYSTEM DAMAGE CHECKLIST

AECOM

Forms

Location	
Form date	Nov 3, 2024
Template	ELECTRICAL SYSTEM DAMAGE CHECKLIST
Description	
Due date	
Submitted by	**Dominic Miranda**
Status	Closed
Last update	Nov 3, 2024, 4:21 AM EST
Last updated by	**Dominic Miranda**
Included references	Assets | Files | Forms | Issues | Photos | File Packages | Sheets | Markups on Sheets | Submittals | RFIs | PCOs | Schedule Activities

1. Electrical Systems Damage Check

1.1 System Description
Electrical

1.2 Area / Room
Elevator Mach room (Upper Conc) Elevator 2 &3

1.3 Visually Checked
(●) Yes ( ) No ( ) N/A

1.4 Damage

- ○ Yes
- ◉ No
- ○ N/A

1.5 Operational

- ◉ Yes
- ○ No
- ○ N/A

1.6 NEMA

- ◉ Yes
- ○ No
- ○ N/A

Nema 1

1.7 Notes/Other Comments

Recommend elevators be tested for QA by a specialized elevator contractor

Form detail

#143: ELECTRICAL SYSTEM DAMAGE CHECKLIST

AECOM

Forms

Location	
Form date	Nov 3, 2024
Template	ELECTRICAL SYSTEM DAMAGE CHECKLIST
Description	
Due date	
Submitted by	**Dominic Miranda**
Status	Closed
Last update	Nov 3, 2024, 4:25 AM EST
Last updated by	**Dominic Miranda**
Included references	Assets | Files | Forms | Issues | Photos | File Packages | Sheets | Markups on Sheets | Submittals | RFIs | PCOs | Schedule Activities

1. Electrical Systems Damage Check

1.1 System Description
Electrical

1.2 Area / Room
B-Riser electrical rooms (all levels)

1.3 Visually Checked
(●) Yes ( ) No ( ) N/A

1.4 Damage

	○ Yes	◉ No	○ N/A

1.5 Operational

◉ Yes	○ No	○ N/A

1.6 NEMA

◉ Yes	○ No	○ N/A

Nema 1

1.7 Notes/Other Comments

Recommend system (riser feeders) be tested for QA

Form detail

#144: ELECTRICAL SYSTEM DAMAGE CHECKLIST

AECOM

Forms

Location	
Form date	Nov 3, 2024
Template	ELECTRICAL SYSTEM DAMAGE CHECKLIST
Description	
Due date	
Submitted by	**Dominic Miranda**
Status	Closed
Last update	Nov 3, 2024, 4:28 AM EST
Last updated by	**Dominic Miranda**
Included references	Assets | Files | Forms | Issues | Photos | File Packages | Sheets | Markups on Sheets | Submittals | RFIs | PCOs | Schedule Activities

1. Electrical Systems Damage Check

1.1 System Description
Electrical

1.2 Area / Room
Upper Mech Concourse (North) D.AK.(2)

1.3 Visually Checked
(●) Yes ( ) No ( ) N/A

1.4 Damage

- ○ Yes
- ◉ No
- ○ N/A

1.5 Operational

- ◉ Yes
- ○ No
- ○ N/A

1.6 NEMA

- ◉ Yes
- ○ No
- ○ N/A

Nema 1

1.7 Notes/Other Comments

Recommend feeder be tested for QA

Form detail

#145: ELECTRICAL SYSTEM DAMAGE CHECKLIST

AECOM

Forms

Location	
Form date	Nov 3, 2024
Template	ELECTRICAL SYSTEM DAMAGE CHECKLIST
Description	
Due date	
Submitted by	**Dominic Miranda**
Status	Closed
Last update	Nov 3, 2024, 4:31 AM EST
Last updated by	**Dominic Miranda**
Included references	Assets | Files | Forms | Issues | Photos | File Packages | Sheets | Markups on Sheets | Submittals | RFIs | PCOs | Schedule Activities

1. Electrical Systems Damage Check

1.1 System Description
Electrical

1.2 Area / Room
E-Riser (all levels)

1.3 Visually Checked
(●) Yes ( ) No ( ) N/A

1.4 Damage

- ○ Yes
- ◉ No
- ○ N/A

1.5 Operational

- ◉ Yes
- ○ No
- ○ N/A

1.6 NEMA

- ◉ Yes
- ○ No
- ○ N/A

Nema 1

1.7 Notes/Other Comments

Recommend system (Riser) be tested for QA

Form detail

#146: ELECTRICAL SYSTEM DAMAGE CHECKLIST

AECOM

Forms

Location	
Form date	Nov 3, 2024
Template	ELECTRICAL SYSTEM DAMAGE CHECKLIST
Description	
Due date	
Submitted by	**Dominic Miranda**
Status	Closed
Last update	Nov 3, 2024, 4:34 AM EST
Last updated by	**Dominic Miranda**
Included references	Assets | Files | Forms | Issues | Photos | File Packages | Sheets | Markups on Sheets | Submittals | RFIs | PCOs | Schedule Activities

1. Electrical Systems Damage Check

1.1 System Description
Electrical

1.2 Area / Room
Right Field Concessions

1.3 Visually Checked
(●) Yes ( ) No ( ) N/A

1.4 Damage

- ○ Yes
- ◉ No
- ○ N/A

1.5 Operational

- ◉ Yes
- ○ No
- ○ N/A

1.6 NEMA

- ◉ Yes
- ○ No
- ○ N/A

Nema 1

1.7 Notes/Other Comments

Recommend feeders and branch circuits be tested for QA

Form detail

#147: ELECTRICAL SYSTEM DAMAGE CHECKLIST

AECOM

Forms

Location	
Form date	Nov 3, 2024
Template	ELECTRICAL SYSTEM DAMAGE CHECKLIST
Description	
Due date	
Submitted by	**Dominic Miranda**
Status	Closed
Last update	Nov 3, 2024, 4:37 AM EST
Last updated by	**Dominic Miranda**
Included references	Assets | Files | Forms | Issues | Photos | File Packages | Sheets | Markups on Sheets | Submittals | RFIs | PCOs | Schedule Activities

1. Electrical Systems Damage Check

1.1 System Description
Electrical

1.2 Area / Room
Playfield floor power closet -6

1.3 Visually Checked
(●) Yes ( ) No ( ) N/A

1.4 Damage

- ○ Yes
- ◉ No
- ○ N/A

1.5 Operational

- ◉ Yes
- ○ No
- ○ N/A

1.6 NEMA

- ◉ Yes
- ○ No
- ○ N/A

Nema 1

1.7 Notes/Other Comments

Recommend branch circuits be tested for QA

Form detail

#148: ELECTRICAL SYSTEM DAMAGE CHECKLIST

AECOM

Forms

Location	
Form date	Nov 3, 2024
Template	ELECTRICAL SYSTEM DAMAGE CHECKLIST
Description	
Due date	
Submitted by	**Dominic Miranda**
Status	Closed
Last update	Nov 3, 2024, 4:40 AM EST
Last updated by	**Dominic Miranda**
Included references	Assets | Files | Forms | Issues | Photos | File Packages | Sheets | Markups on Sheets | Submittals | RFIs | PCOs | Schedule Activities

1. Electrical Systems Damage Check

1.1 System Description
Electrical

1.2 Area / Room
Main South (MSB)

1.3 Visually Checked
(●) Yes ( ) No ( ) N/A

1.4 Damage

- ○ Yes
- ◉ No
- ○ N/A

1.5 Operational

- ◉ Yes
- ○ No
- ○ N/A

1.6 NEMA

- ◉ Yes
- ○ No
- ○ N/A

Nema 1

1.7 Notes/Other Comments

Recommended testing for QA

Form detail

#149: ELECTRICAL SYSTEM DAMAGE CHECKLIST

AECOM

Forms

Location	
Form date	Nov 3, 2024
Template	ELECTRICAL SYSTEM DAMAGE CHECKLIST
Description	
Due date	
Submitted by	**Dominic Miranda**
Status	Closed
Last update	Nov 3, 2024, 4:42 AM EST
Last updated by	**Dominic Miranda**
Included references	Assets | Files | Forms | Issues | Photos | File Packages | Sheets | Markups on Sheets | Submittals | RFIs | PCOs | Schedule Activities

1. Electrical Systems Damage Check

1.1 System Description
Electrical

1.2 Area / Room
Field Power electrical closet 3 & 5

1.3 Visually Checked
(●) Yes ( ) No ( ) N/A

1.4 Damage

	○ Yes	◉ No	○ N/A

1.5 Operational

◉ Yes	○ No	○ N/A

1.6 NEMA

◉ Yes	○ No	○ N/A

Nema 1

1.7 Notes/Other Comments

Recommend testing all branch circuits for QA

Form detail

#150: ELECTRICAL SYSTEM DAMAGE CHECKLIST

AECOM

Forms

Location	
Form date	Nov 3, 2024
Template	ELECTRICAL SYSTEM DAMAGE CHECKLIST
Description	
Due date	
Submitted by	**Dominic Miranda**
Status	Closed
Last update	Nov 3, 2024, 4:44 AM EST
Last updated by	**Dominic Miranda**
Included references	Assets | Files | Forms | Issues | Photos | File Packages | Sheets | Markups on Sheets | Submittals | RFIs | PCOs | Schedule Activities

1. Electrical Systems Damage Check

1.1 System Description
Electrical

1.2 Area / Room
A Riser (all levels)

1.3 Visually Checked
(●) Yes ( ) No ( ) N/A

1.4 Damage

- ○ Yes
- ◉ No
- ○ N/A

1.5 Operational

- ◉ Yes
- ○ No
- ○ N/A

1.6 NEMA

- ◉ Yes
- ○ No
- ○ N/A

Nema 1

1.7 Notes/Other Comments

Recommend riser feeders be tested for QA

Form detail

#151: ELECTRICAL SYSTEM DAMAGE CHECKLIST

AECOM

Forms

Location	
Form date	Nov 3, 2024
Template	ELECTRICAL SYSTEM DAMAGE CHECKLIST
Description	
Due date	
Submitted by	**Dominic Miranda**
Status	Closed
Last update	Nov 3, 2024, 4:55 AM EST
Last updated by	**Dominic Miranda**
Included references	Assets | Files | Forms | Issues | Photos | File Packages | Sheets | Markups on Sheets | Submittals | RFIs | PCOs | Schedule Activities

1. Electrical Systems Damage Check

1.1 System Description
Electrical

1.2 Area / Room
Video Board Power Feeders

1.3 Visually Checked
(●) Yes ( ) No ( ) N/A

1.4 Damage

	○ Yes	◉ No	○ N/A

1.5 Operational

◉ Yes	○ No	○ N/A

1.6 NEMA

◉ Yes	○ No	○ N/A

1.7 Notes/Other Comments

Recommend that the 800 and 1,200 amps feeders to the main video boards be tested for QA

Form detail

#152: ELECTRICAL SYSTEM DAMAGE CHECKLIST

AECOM

Forms

Location	
Form date	Nov 3, 2024
Template	ELECTRICAL SYSTEM DAMAGE CHECKLIST
Description	
Due date	
Submitted by	**Dominic Miranda**
Status	Closed
Last update	Nov 3, 2024, 5:00 AM EST
Last updated by	**Dominic Miranda**
Included references	Assets | Files | Forms | Issues | Photos | File Packages | Sheets | Markups on Sheets | Submittals | RFIs | PCOs | Schedule Activities

1. Electrical Systems Damage Check

1.1 System Description
Network

1.2 Area / Room
Telecom risers on all levels

1.3 Visually Checked
(●) Yes ( ) No ( ) N/A

1.4 Damage

- ○ Yes
- ◉ No
- ○ N/A

1.5 Operational

- ◉ Yes
- ○ No
- ○ N/A

1.6 NEMA

- ○ Yes
- ○ No
- ◉ N/A

1.7 Notes/Other Comments

All telecoms were checked for visual damage, and none indicated that water had penetrated the spaces. Recommend the network be tested for QA

Form detail

#153: ELECTRICAL SYSTEM DAMAGE CHECKLIST

AECOM

Forms

Location	
Form date	Nov 3, 2024
Template	ELECTRICAL SYSTEM DAMAGE CHECKLIST
Description	
Due date	
Submitted by	**Dominic Miranda**
Status	Closed
Last update	Nov 3, 2024, 5:06 AM EST
Last updated by	**Dominic Miranda**
Included references	Assets | Files | Forms | Issues | Photos | File Packages | Sheets | Markups on Sheets | Submittals | RFIs | PCOs | Schedule Activities

1. Electrical Systems Damage Check

1.1 System Description
Low Voltage Systems (DAS-WiFi)

1.2 Area / Room
all levels, ineterior and exterior areas

1.3 Visually Checked
(●) Yes ( ) No ( ) N/A

1.4 Damage

- [x] Yes
- [ ] No
- [ ] N/A

To be determined after a fully test

1.5 Operational

- [ ] Yes
- [x] No
- [ ] N/A

1.6 NEMA

- [ ] Yes
- [ ] No
- [x] N/A

1.7 Notes/Other Comments

Several areas, including the catwalk, were exposed directly to water. An IT engineer will need to test and commission the system as a whole.

Form detail

#154: ELECTRICAL SYSTEM DAMAGE CHECKLIST

AECOM

Forms

Location	
Form date	Nov 3, 2024
Template	ELECTRICAL SYSTEM DAMAGE CHECKLIST
Description	
Due date	
Submitted by	**Dominic Miranda**
Status	Closed
Last update	Nov 3, 2024, 5:12 AM EST
Last updated by	**Dominic Miranda**
Included references	Assets | Files | Forms | Issues | Photos | File Packages | Sheets | Markups on Sheets | Submittals | RFIs | PCOs | Schedule Activities

1. Electrical Systems Damage Check

1.1 System Description
Electrical

1.2 Area / Room
Parking Lot Lighting

1.3 Visually Checked
○ Yes ◉ No ○ N/A

1.4 Damage

	○ Yes	◉ No	○ N/A

1.5 Operational

◉ Yes	○ No	○ N/A

1.6 NEMA

◉ Yes	○ No	○ N/A

1.7 Notes/Other Comments

We did not verify whether the parking lighting was functional or damaged. We recommend a full test to ensure that all feeders, including the lighting lumens output, are functional.

Form detail

#155: ELECTRICAL SYSTEM DAMAGE CHECKLIST

AECOM

Forms

Location	
Form date	Nov 3, 2024
Template	ELECTRICAL SYSTEM DAMAGE CHECKLIST
Description	
Due date	
Submitted by	**Dominic Miranda**
Status	Closed
Last update	Nov 3, 2024, 5:14 AM EST
Last updated by	**Dominic Miranda**
Included references	Assets | Files | Forms | Issues | Photos | File Packages | Sheets | Markups on Sheets | Submittals | RFIs | PCOs | Schedule Activities

1. Electrical Systems Damage Check

1.1 System Description
Electrical

1.2 Area / Room
Broadcast truck power feeders

1.3 Visually Checked
(●) Yes ( ) No ( ) N/A

1.4 Damage

- ○ Yes
- ◉ No
- ○ N/A

1.5 Operational

- ◉ Yes
- ○ No
- ○ N/A

1.6 NEMA

- ◉ Yes
- ○ No
- ○ N/A

1.7 Notes/Other Comments

Recommend power feeders be tested for QA.

Form detail

#156: ELECTRICAL SYSTEM DAMAGE CHECKLIST

AECOM

Forms

Location	
Form date	Nov 3, 2024
Template	ELECTRICAL SYSTEM DAMAGE CHECKLIST
Description	
Due date	
Submitted by	**Dominic Miranda**
Status	Closed
Last update	Nov 3, 2024, 5:16 AM EST
Last updated by	**Dominic Miranda**
Included references	Assets | Files | Forms | Issues | Photos | File Packages | Sheets | Markups on Sheets | Submittals | RFIs | PCOs | Schedule Activities

1. Electrical Systems Damage Check

1.1 System Description
Broadcast

1.2 Area / Room
Truck Dock Areas

1.3 Visually Checked
(●) Yes ( ) No ( ) N/A

1.4 Damage

- ○ Yes
- ◉ No
- ○ N/A

1.5 Operational

- ◉ Yes
- ○ No
- ○ N/A

1.6 NEMA

- ◉ Yes
- ○ No
- ○ N/A

1.7 Notes/Other Comments

Recommend all broadcast, audio, and network connections be tested for QA

Form detail

#157: ELECTRICAL SYSTEM DAMAGE CHECKLIST

AECOM

Forms

Location	
Form date	Nov 3, 2024
Template	ELECTRICAL SYSTEM DAMAGE CHECKLIST
Description	
Due date	
Submitted by	**Dominic Miranda**
Status	Closed
Last update	Nov 3, 2024, 5:20 AM EST
Last updated by	**Dominic Miranda**
Included references	Assets | Files | Forms | Issues | Photos | File Packages | Sheets | Markups on Sheets | Submittals | RFIs | PCOs | Schedule Activities

1. Electrical Systems Damage Check

1.1 System Description
Network

1.2 Area / Room
all risers and floor distributions

1.3 Visually Checked
(●) Yes ( ) No ( ) N/A

1.4 Damage

	○ Yes	◉ No	○ N/A

1.5 Operational

◉ Yes	○ No	○ N/A

1.6 NEMA

○ Yes	◉ No	○ N/A

1.7 Notes/Other Comments

We recommend performing a network fiber distribution test throughout the risers for DB losses, and we noted some areas where the fiber strand appears to be compromised.

Form detail

#158: ELECTRICAL SYSTEM DAMAGE CHECKLIST

AECOM

Forms

Location	
Form date	Nov 3, 2024
Template	ELECTRICAL SYSTEM DAMAGE CHECKLIST
Description	
Due date	
Submitted by	**Dominic Miranda**
Status	Closed
Last update	Nov 3, 2024, 5:30 AM EST
Last updated by	**Dominic Miranda**
Included references	Assets | Files | Forms | Issues | Photos | File Packages | Sheets | Markups on Sheets | Submittals | RFIs | PCOs | Schedule Activities

1. Electrical Systems Damage Check

1.1 System Description
Data Cabling

1.2 Area / Room
all areas and levels

1.3 Visually Checked
(●) Yes ( ) No ( ) N/A

1.4 Damage

- [x] Yes
- [ ] No
- [ ] N/A

1.5 Operational

- [ ] Yes
- [x] No
- [ ] N/A

to be determined after a complete test

1.6 NEMA

- [ ] Yes
- [x] No
- [ ] N/A

1.7 Notes/Other Comments

We recommend a complete test of all data cabling for categories 5 and 6, pending each area's QA requirements. As noted in another report, the data cabling on the press's lower and upper levels was exposed directly to water.

Form detail

#159: ELECTRICAL SYSTEM DAMAGE CHECKLIST

AECOM

Forms

Location	
Form date	Nov 3, 2024
Template	ELECTRICAL SYSTEM DAMAGE CHECKLIST
Description	
Due date	
Submitted by	**Dominic Miranda**
Status	Closed
Last update	Nov 3, 2024, 5:38 AM EST
Last updated by	**Dominic Miranda**
Included references	Assets | Files | Forms | Issues | Photos | File Packages | Sheets | Markups on Sheets | Submittals | RFIs | PCOs | Schedule Activities

1. Electrical Systems Damage Check

1.1 System Description
Electrical (Generator)

1.2 Area / Room
Site

1.3 Visually Checked
(●) Yes ( ) No ( ) N/A

1.4 Damage

- ○ Yes
- ◉ No
- ○ N/A

1.5 Operational

- ◉ Yes
- ○ No
- ○ N/A

1.6 NEMA

- ◉ Yes
- ○ No
- ○ N/A

1.7 Notes/Other Comments

We recommend that an authorized manufacturing contractor commission the life safety systems generator.

Form detail

#160: ELECTRICAL SYSTEM DAMAGE CHECKLIST

AECOM

Forms

Location	
Form date	Nov 3, 2024
Template	ELECTRICAL SYSTEM DAMAGE CHECKLIST
Description	
Due date	
Submitted by	**Dominic Miranda**
Status	Closed
Last update	Nov 3, 2024, 5:41 AM EST
Last updated by	**Dominic Miranda**
Included references	Assets | Files | Forms | Issues | Photos | File Packages | Sheets | Markups on Sheets | Submittals | RFIs | PCOs | Schedule Activities

1. Electrical Systems Damage Check

1.1 System Description
Electrical life system systems

1.2 Area / Room
all areas and levels

1.3 Visually Checked
(●) Yes ( ) No ( ) N/A

1.4 Damage

Yes ○ No ● N/A ○

1.5 Operational

Yes ○ No ● N/A ○

TBD after test with the generator for compliance

1.6 NEMA

Yes ○ No ● N/A ○

1.7 Notes/Other Comments

We recommend testing the life safety system (emergency lighting) for code-compliant egress.

Form detail

#161: ELECTRICAL SYSTEM DAMAGE CHECKLIST

AECOM

Forms

Location	
Form date	Nov 3, 2024
Template	ELECTRICAL SYSTEM DAMAGE CHECKLIST
Description	
Due date	
Submitted by	**Dominic Miranda**
Status	Closed
Last update	Nov 3, 2024, 5:46 AM EST
Last updated by	**Dominic Miranda**
Included references	Assets | Files | Forms | Issues | Photos | File Packages | Sheets | Markups on Sheets | Submittals | RFIs | PCOs | Schedule Activities

1. Electrical Systems Damage Check

1.1 System Description
Fire Alarm System

1.2 Area / Room
all areas and levels

1.3 Visually Checked
(●) Yes ( ) No ( ) N/A

1.4 Damage

- [x] Yes
- [ ] No
- [ ] N/A

1.5 Operational

- [x] Yes
- [ ] No
- [ ] N/A

1.6 NEMA

- [ ] Yes
- [x] No
- [ ] N/A

1.7 Notes/Other Comments

We looked at the main fire alarm panel, which appears to be functional, although there were system troubles indicated on the display that may have been caused by devices removed during the damaged areas. We recommend that a certified fire alarm contractor perform a full test in compliance with state and NFPA codes.

Form detail

#162: ELECTRICAL SYSTEM DAMAGE CHECKLIST

AECOM

Forms

Location	
Form date	Nov 3, 2024
Template	ELECTRICAL SYSTEM DAMAGE CHECKLIST
Description	
Due date	
Submitted by	**Dominic Miranda**
Status	Closed
Last update	Nov 3, 2024, 5:55 AM EST
Last updated by	**Dominic Miranda**
Included references	Assets | Files | Forms | Issues | Photos | File Packages | Sheets | Markups on Sheets | Submittals | RFIs | PCOs | Schedule Activities

1. Electrical Systems Damage Check

1.1 System Description
Elevators

1.2 Area / Room
all areas (vertical system)

1.3 Visually Checked
(●) Yes ( ) No ( ) N/A

1.4 Damage

	○ Yes	◉ No	○ N/A

1.5 Operational

◉ Yes	○ No	○ N/A

1.6 NEMA

◉ Yes	○ No	○ N/A

1.7 Notes/Other Comments

We recommend that all elevators, including dedicated ADA, be tested with regular and emergency power for QA, including functional electric pit pumps/drains. A specialized elevator contractor shall perform all tests and commissioning.

Form detail

#163: ELECTRICAL SYSTEM DAMAGE CHECKLIST

AECOM

Forms

Location	
Form date	Nov 3, 2024
Template	ELECTRICAL SYSTEM DAMAGE CHECKLIST
Description	
Due date	
Submitted by	**Dominic Miranda**
Status	Closed
Last update	Nov 3, 2024, 6:05 AM EST
Last updated by	**Dominic Miranda**
Included references	Assets | Files | Forms | Issues | Photos | File Packages | Sheets | Markups on Sheets | Submittals | RFIs | PCOs | Schedule Activities

1. Electrical Systems Damage Check

1.1 System Description
Lighting Protection

1.2 Area / Room
Catwalk

1.3 Visually Checked
(●) Yes ( ) No ( ) N/A

1.4 Damage

- ○ Yes
- ◉ No
- ○ N/A

To be verified by specilized contractor

1.5 Operational

- ◉ Yes
- ○ No
- ○ N/A

1.6 NEMA

- ○ Yes
- ○ No
- ◉ N/A

1.7 Notes/Other Comments

We recommend a specialized contractor verify the integrity loop system was not compromised by the storm through the roof and catwalk

Lightning Protection System

All South Lightening Protection reviewed the lightening protection system. Nearly all of the approximately 175 strike point locations attached to the 24 main cable bundles are missing and will need to be replaced. Over half of the strike points locations at the perimeter of the roof are missing and need to be replaced. The copper cable conductors for the system appears to be in place and functional. A full inspection and continuity test needs to be complete for a complete assessment.





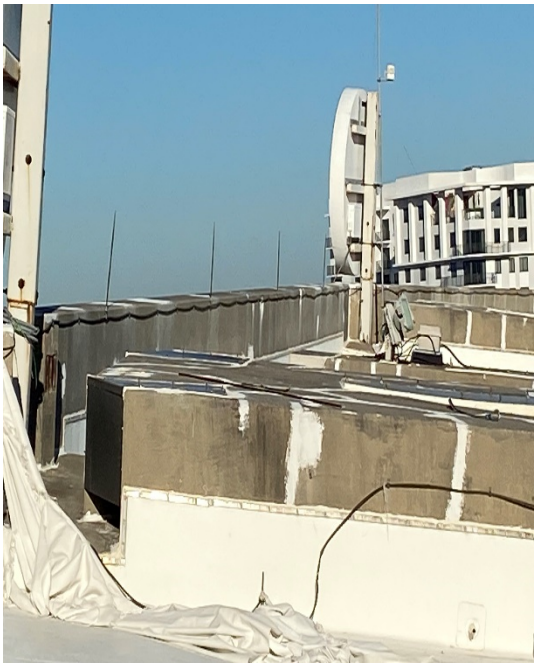



D

Mechanical Systems

HENNESSY CONSTRUCTION SERVICES

AECOM HUNT

1. HVAC System

Prime Air Conditioning & Refrigeration, Inc. was utilized to assess the HVAC Systems for the stadium. In general HVAC system are intact and able to function. The specific report for the HVAC System follows :

PRIME
Air Conditioning & Refrigeration, Inc.
4595 118th Avenue North
Clearwater, FL 33762
Florida Contractor
License No: CAC057307

Condition and Evaluation of Mechanical Equipment and Spaces

HURRICANE MILTON MECHANICAL DAMAGES AND/OR CONDITIONS AFTER ROOFING LOST TO STORM– Preliminary

October 22nd – October 24th 2024

Prepared by – JC Jannarone – Vice President / Service Manager

Prepared for – Hennessey Construction – Mark Stalker

Property Location – Tropicana Field - 1 Tropicana Dr., St. Petersburg, FL 33705





Report Forms for inspected areas include the following items as requested for inspection assessment and recommendation

- Equipment identification
- Equipment location
- Visual Conditions
- Mechanical Conditions

Primary onsite personnel responsible for inspection and information gathered:

- JC Jannarone
- Brad Jannarone
- Zach Swain

Assisted by Nate Kuusela, Manager of Building Operations Tampa Bay Rays

SUMMARY

Prime Air Conditioning & Refrigeration performed a complete guided building inspection focused on the Mechanical Equipment. Tropicana Field Mechanical onsite personnel's insight, initial inspection comments and previous mechanical issues referenced as encountered. Comprehensive Building drawings were unavailable or inadequate to site conditions, many of the drawings do not match the remodeling or onsite orientation of offices and/or ducting. This makes reference to unit numbers, ID tags and specification information irrelevant. Comments made as they are encountered.

OBSERVATIONS AND RECOMMENDATIONS

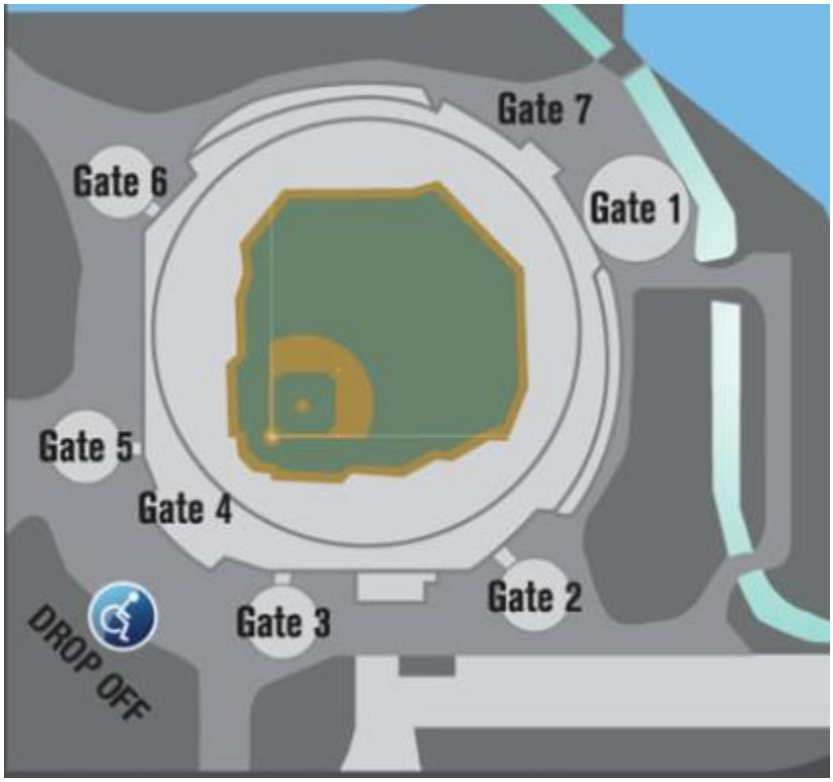

Inspections began in the outer areas of the Chilled Water Towers and Boilers, between Gate 2 and 3.

Towers –





Minimal impact – Additional debris present beyond normal tower accumulation in the sump. Staff indicated routine maintenance was scheduled for Nov 2024.
RECOMMENDATION – CLEAR DEBRIS

Boilers –

Boilers for the airside loop reheat have been inoperable for +10 years. No storm impact found.

RECOMMENDATION - NONE

Centrifugal Chillers –



No impact found. Chillers condition operational and similar to function prior to Hurricane impact, onsite personnel have tested Chillers and found them in condition same as prior to Hurricane.

RECOMMENDATION – COVER ELECTRICAL AND ELECTRONIC ITEMS FROM EXPOSURE

Circulation Loop Pumps and Tower Pumps

No impact Found. Tested all pumps via override and hand mode at VFD with onsite personnel. Pump condition same as prior to Hurricane.

RECOMMENDATION – COVER ELECTRICAL AND ELECTRONIC ITEMS FROM EXPOSURE

Chiller Plant AHU's

5 AHU's present in the room. No impact Found. All the AHU's show no sign of water intrusion. If equipped with VFD, no noticeable damages.
7 exhaust and circulation fans in the room. No impact Found. All EF indicated fans show no signs of water intrusion. If equipped with VFD, no noticeable damages.
*Note – there are multiple AHU's and EF equipment disabled and inoperable in this area, NOT from storm related issues. Prior condition.

RECOMMENDATION – COVER ELECTRICAL AND ELECTRONIC ITEMS FROM EXPOSURE

Clubhouse Mechanical Rooms

5 AHU's in mechanical spaces on Clubhouse level. Several are currently operational and conditioning the respective area. No noticeable damages in these areas or water intrusion noted beyond noted below. Typical water on floor from condensation or aged and poorly insulated chilled water piping and condensate drains. VFD's operational. The Uniform storage area directly shows the impact of above ceiling intrusion. Damage to ceiling visible.

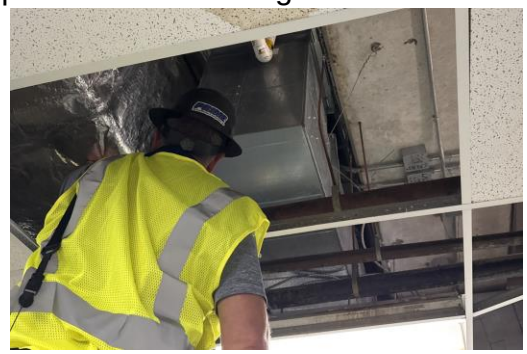



This area also includes the Batting Area, Pitching lab, uniform storage area offices.

RECOMMENDATION - This area is directly below the "at risk" location within the Dome Ring or roofing damaged area. Isolation of units and covering of the electrical and electronic components. Risk from above water drainage. No protection from above.

Gate 3, 4, 5, Guest Area Mechanical Systems / I.T. rooms / Television Ops Room

Multiple mechanical units in these spaces. Walk in refrigeration, Ductless systems VRF, Conventional equipment all within the I.T. area and Television ops areas. Suites for the radio, television and guest media areas are open to the field without restriction, no glass or closeable barrier. Some visual observations of water intrusion. Area currently under mechanical cooling from the Chilled Water system, however also serving areas within the open area to the dome. Condensation on the grilles and ducting.

RECOMMENDATION - This area is directly below the "at risk" location within the Dome Ring or roofing damaged area. Isolation of units and covering of the electrical and electronic components. Risk from above water drainage. No protection from above. HVAC UNITS WITHIN THE MEDIA EQUIPMENT AREA ARE AT HIGH RISK OF DAMAGE FROM WATER INTRUSION FROM SEAMS IN THE CONCRETE STRUCTURE ABOVE.

Gate 6 and 7 Guest Areas Mechanical Systems





Multiple Mechanical units within these spaces. Serving the Gate 1 entrance, Guest services, Guest Food Markets, Bar and seating areas, Fan Deck and associated areas. Partially protected by the East Roof, however the decking and connection to that are storm damaged. These mechanical areas do not show storm damage. Equipment and ducting are without notable damage as well. Air handlers each have VFD fan motors with controllers. No visual indication of damage.

RECOMMENDATION - This area is directly below the “at risk” location within the Dome Ring or roofing damaged area. Isolation of units and covering of the electrical and electronic components. Risk from above water drainage. No protection from above. Cover and contain this area.

4th Floor Office and Storage Area

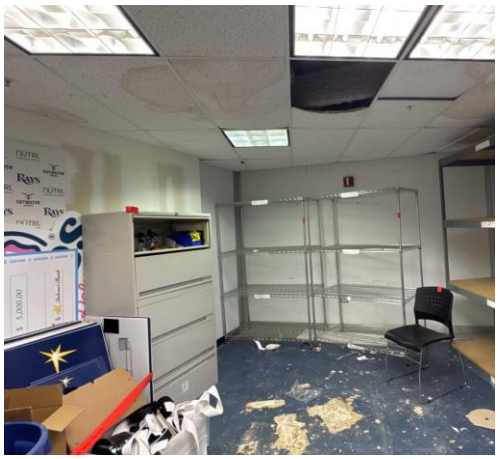









Air Handlers in this location found without impact or any visible signs of damage. Each AHU has an exhaust located within the room, also without damage or issue. There are several VAV boxes as well. No sign of damage to HVAC equipment. Evidence of water intrusion visible along drywall. Mildew in the area is present. Drywall/paint peeling in area.

RECOMMENDATION - This area is directly below the “at risk” location within the Dome Ring or roofing damaged area. Isolation of units and covering of the electrical and electronic components. Risk from above water drainage. No protection from above. Cover and contain this area. Repairs to the affected ducting and registers will be necessary after building made waterproof/dry.

Family waiting, Roof Top Equipment, Storage

These areas and adjacent areas are inside the Ring Dome and/or affected area of facia and moldings removed by storm. Some are served by Roof top package systems, some are VAV with Central AHU's. No significant impacted areas. Some of the ceilings are showing small signs of water dripping onto them.

RECOMMENDATION - This area is directly below the "at risk" location within the Dome Ring or roofing damaged area. Isolation of units and covering of the electrical and electronic components. Risk from above water drainage. No protection from above. Cover and contain this area. There are VFD and control boxes within at risk locations and should be covered ASAP.

Gate 1 Mechanical Spaces



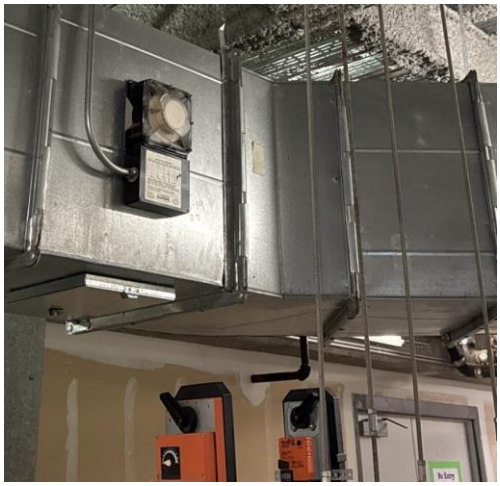

Units serve a substantial portion of the GATE 1 entry as well as the Guest areas leading into the seating stands. No water intrusion found. These areas are underneath a portion of the Northeast roof that attaches to the DOME RING wall. Areas very close to this location are fully exposed to the open Dome. Operation of these is open to the outdoors. Units are running currently.

RECOMMENDATION - This area is not directly below the "at risk" location within the Dome Ring or roofing damaged area BUT are very close. Soffit and facia are damaged just outside this are. Isolation of units and covering of the electrical and electronic components is recommended. Risk from above water drainage from outside the space into mechanical areas to be expected.

Various Locations inside Ring Dome – Suites, Rays Fan Deck, Stingray Exhibit







Suites located around the interior have doors that will isolate them from the exterior. They are all currently closed. Each of the suites is exposed to the open area in the RING DOME. The have small horizontal ducted unit. Access is limited without ceiling removal. Rays Fan Deck area have 13 Horizontal Ducted units. These are along the RING DOME edge. Drywall along the vertical soffit areas are damaged by storm. Mechanical equipment under west roof showing no signs of damage. Ducting exposed to these areas are within the path of any rain into the Dome Ring.

RECOMMENDATION - This area is not directly below the “at risk” location within the Dome Ring or roofing damaged area BUT are very close. Soffit and facia are damaged just outside this are. Isolation of units and covering of the electrical and electronic components is recommended. Risk from above water drainage from outside the space into mechanical areas to be expected.

Dome Mechanical Equipment and ducting







This area is served in majority by 11 Built Up AHU units. Each of these units have mechanical spaces dedicated to only these AHU systems. They are in mezzanine areas at the top of the building corridors. None of them show any signs of damage. The ducting is aged but does not appear to have damages. The vent/louver appears to also be intact and undamaged.

RECOMMENDATION – These mechanical areas are likely to remain undamaged by issues within the DOME RING. The ducting and louvers will be directly impacted by any rain or long term exposure to sun. Recommend decommission the HVAC Air handlers, sealing the louver outlets at both the upper and mid deck locations. Type of materials dependent on duration of exposure.

CONCLUSION AND RECOMMENDATION

Very little of the large amount of mechanical equipment located within Tropicana Field was affected by Hurricane Milton damages. The HVAC areas impacted by the damage are currently limited to flexible ducting, ceiling grilles/louvers and ducting insulation wrap. We encountered no equipment not operating, with exception equipment previously not operating. There are no conditions that would allow us to test any operational equipment without a roof in place. Equipment running is the only observation made. Observations were made for equipment running into the open dome area. Supply air sections were observed sweating at the openings due to exposure to outside conditions. Expected interior conditions were high humidity and temperature. Areas are still in operation under the Chilled Water Plant. Chillers are enabled and would run.

Currently recommend efforts to seal the HVAC outlets into the Dome Ring exposed zones. Possibly shut off the Chilled Water system to prevent condensation in areas exposed to outdoors. Use portable HVAC or forced air fans to prevent accumulation of stale air. Any effort to prevent further damages from rain, birds, and debris should be taken. Process and path to make these preventions are not a part of this report.



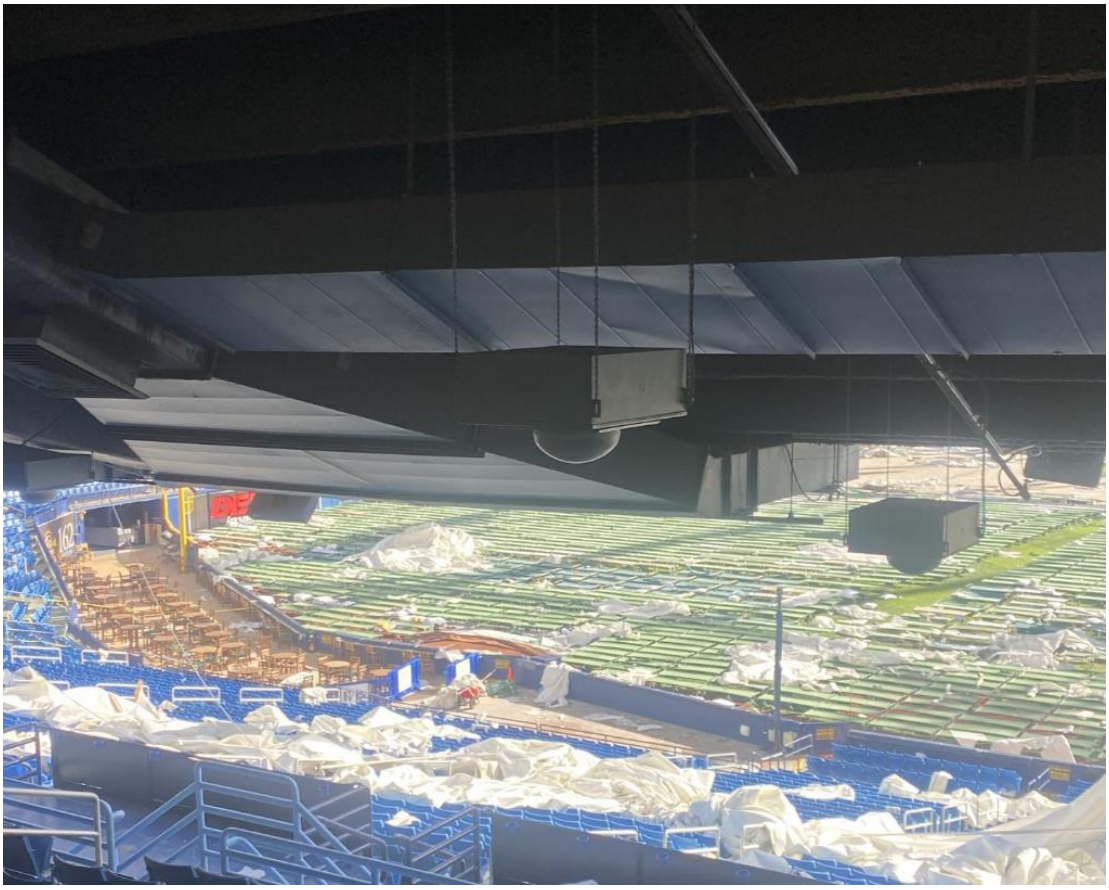

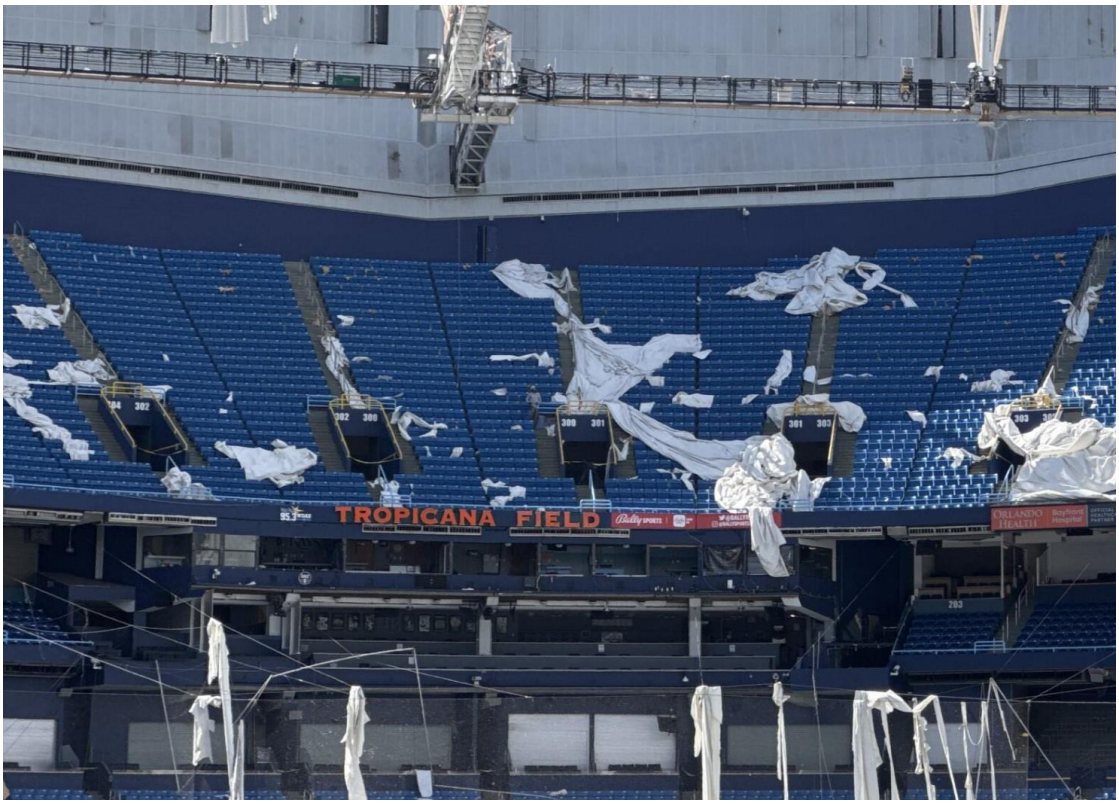
TROPICANA FIELD

2. Fire Protection System

The fire protection system was evaluated by Weaver Fire Protection Services, Inc. who prepared the following report.

Fire Sprinkler Storm Damage Assessment

Hennessy Construction Services **October 30, 2024**
2300 22nd Street North
St. Petersburg, FL 33713

Attn. Jennifer Mackay

RE: Tropicana Field Fire Sprinkler Storm Damage Assessment
St. Petersburg, FL

Weaver Fire Protection Services Inc. performed a visual inspection of the existing fire sprinkler system on October 23rd and 24th 2024 at the above property. At the time of this inspection no damage was observed that could be attributed to hurricane Milton. The items listed below appeared to be a maintenance issue due to the age of the building.

- **Fire Pump:** Fire pump, jockey pump, and pump controllers appear to be in working order and undamaged by the storm. All control valves in the fire pump room appeared to be open and functional. Gauges were showing pressure and appeared to be in working order.
- **Riser Assemblies:** Control valves and gauges appear open and in working order.
- **Fire Sprinkler Piping and Hangers:** All the visible piping and hangers appeared to be free of damage by the storm.
    - Some of the pipes did show signs of corrosion (rust). The structural integrity of these pipes is unknown.
    - Some grooved couplings showed signs of corrosion or leaking. This could be the coupling lubricant commonly used when this sprinkler system was installed. When it gets warm it can cause what appears to be a leak or corrosion. Further investigation will be required to determine the cause.
- **Fire Sprinklers:** None of the fire sprinklers appeared to be damaged.
    - Throughout the building approximately 28 sprinklers showed signs of corrosion.
    - 5th floor - gate 6, it appeared approximately 4 sprinklers were wet, could possibly be leaking.

This assessment is respectively submitted by,
Rick Gaston
Operations Manager

Weaver Fire Protection Services, Inc.
15370 CR 565A, Suite B ● Groveland, FL 34736 ● Ph 352-708-4527 / Fx 352-354-9911
weaver@weaverfire.com

E

Architectural Systems

HENNESSY CONSTRUCTION SERVICES

AECOM HUNT

E. Architectural Systems

The extent of the water intrusion damages to GWB and Ceiling systems are identified in the EFI Global section of the Assessment. Removal of materials indicated as damaged is by others and is not included in the estimate.

Wood Plank Flooring for the Budwiser Deck Level is noted and included in the estimate for furnishing and installing in quantities identified in the estimate. Removal and disposal of the existing material is excluded and is performed by others.

Water Damage and Mold Remediation Protocol

EFI Global Project: 032.05366 | Issuance Date: October 22, 2024

Tropicana Field
1 Tropicana Drive, St. Petersburg, Florida 33705

Site Inspection Date(s):	October 21, 2024
Date of Loss:	October 9, 2024
Claim Number:	Market Loss

Prepared For:
Sedgwick Loss Adjusting
5871 Glenridge Dr, Ste. 395, Atlanta, Georgia 30328
Patrick Washington | 678.463.3451 | patrick.washington@sedgwick.com

WATER DAMAGE AND MOLD REMEDIATION PROTOCOL

EFI Global, Inc. (EFI) has designed this remediation protocol to address storm-related water damage related to the Tropicana Field located at 1 Tropicana Drive in St. Petersburg, Florida. The property was impacted by Hurricane Milton (Milton), which made landfall on the Gulf Coast of Florida as a Category 3 storm with 120 miles per hour (mph) sustained winds. EFI's assessment was requested in order to document existing site conditions at the property and provide recommendations regarding the appropriate remediation efforts to address existing storm-related water and/or mold damage. This protocol contains EFI's recommendations to address the storm-related damage observed and does not attempt to interpret or provide any consideration for the insured's policy language.

This remediation protocol was developed based on the inspection completed by EFI's Industrial Hygienists including, Jesus Cardenas (Florida Mold Related Services Assessor MRSA3981, Exp. July 31, 2026), Harry Malave, Jose Ayon, Karen Phegley (CIH), Thomas McManus, and Michael Pacifico. For the development of this protocol, EFI performed a detailed assessment of the reportedly impacted areas of the property on October 21, 2024. This protocol may be utilized as guidance for restoration activities at the property. The areas included in this assessment are associated with the loss that occurred on October 9, 2024.

This remediation protocol applies to the following building locations inspected as of October 21, 2024:

- Suites Concourse Level: 6th floor (all accessible areas)
- Suites Concourse Level: 5th floor northeast area only
- Field Service Level: west area only
- Upper Mechanical Level (all accessible areas)
- Club Level (all accessible areas)

EFI returned on October 22, 2024, to perform additional inspections in the following areas. EFI will report findings from those inspections in the updated remediation protocol to be submitted on October 23, 2024:

- Suites Concourse Level: 5th floor remaining areas
- Field Service Level: east area
- 3rd floor
- Various locations that were previously not accessible on October 21, 2024 (outlined in yellow on diagrams)

EFI recommends utilizing this Remediation Protocol to address the appropriate methods and procedures in drying, cleaning, and/or removing building materials impacted as a result of this loss. This protocol is based solely on the data collected and conditions observed at the subject property at the time of EFI's assessment and is designed to be utilized following elimination of all sources of moisture from within the property. A goal of proper remediation is to remove or clean impacted materials in a way that prevents the emission of demolition particulate or other contaminants (e.g., mold), if present, from leaving a defined work area and entering an occupied or non-work area. EFI developed remediation recommendations that are based on the following industry guidelines:

- Occupational Safety and Health Administration, ***Respiratory Protection, 29 CFR Parts 1910.134***, January 1998.

- U.S. Department of Labor, Occupational Health and Safety Administration, ***A Brief Guide to Mold in the Workplace***.
- Environmental Protection Agency (EPA), Office of Air and Radiation, Indoor Environments Division. ***Mold Remediation in Schools and Commercial Buildings***. March 2001. EPA 402-K-01-001.
- Institute of Inspection, Cleaning and Restoration, ***IICRC S520-2015 (3rd Edition), Standard and Reference Guide for Professional Mold Remediation***.
- Institute of Inspection, Cleaning and Restoration, ***IICRC S500-2021 (5th Edition), Standard and Reference Guide for Professional Water Damage Restoration***.
- National Air Duct Cleaners Association, ***Assessment, Cleaning, and Restoration of HVAC Systems***, 2021.
- Occupation Safety and Health Administration (OSHA) Respiratory Protection Standard, 29 CFR Parts 1910 and 1926.
- ASTM D7338-14, Standard Guide for Assessment Of Fungal Growth in Buildings.
- Florida Administrative Code 61-31.701 Minimum Standards and Practices for Mold Assessors.
- Current industry best practices and guidelines.

The remediation contractor is advised to refer to the documents listed above for further guidance and information prior to remediation-related activities. These documents provide general guidance for the remediation process. If there are newer versions of these documents, the most current versions shall be followed.

At the time of EFI's assessment on October 21, 2024, water damage requiring some degree of remediation was present at the property. In the state of Florida when mold contamination in a building affects ten (10) square feet or more, this constitutes a regulated mold project. Localized areas of visible mold exceeding ten (10) square feet were identified within some impacted areas at this property. The location of the impacted areas are outlined in the damage diagrams of **Attachment 1.** A regulated mold project must be remediated by a licensed Florida Department of Business and Professional Regulation (DBPR) Remediator. Adherence to containment procedures and proper personal protective equipment (PPE) are also required on a regulated mold project.

ASBESTOS AND LEAD TESTING

Asbestos and lead hazards should be evaluated prior to the disturbance of any building materials, regardless of the age of construction. The contractor shall be responsible for adhering to any and all applicable federal, state, and local regulations throughout the duration of the project. Specific regulatory requirements for asbestos may be referenced via the Environmental Protection Agency (EPA), Florida Department of Environmental Protection (FDEP), and OSHA resources.

Lead hazards must be evaluated under the OSHA Lead in Construction Standard (29 CFR 1926.62). Additionally, child-occupied facilities or target housing constructed prior to 1978 must also consider the EPA's Renovate, Repair, and Paint Program (RRP) guidelines. Under the authority of the Toxic Substances Control Act (TSCA), lead-based paint (LBP) is subject to the regulatory requirements of the EPA's RRP rule. The RRP Program established the mandatory use of Lead-Safe work practices when impacting > 6 square feet of LBP per interior room or > 20 square feet of exterior LBP in target (pre-1978) housing and child-occupied facilities. Performance of a lead survey was not included in EFI's scope of services.

EFI has requested available asbestos survey documentation related to the subject property and will review the available information upon receipt. Until survey information is received, or sampling data indicates there are no materials containing ACM within the current scope of remediation, EFI recommends

performing only those scope items that will not cause a potential disturbance (i.e., cleaning, drying, and equipment placement activities).

At the time of this protocol development, the disturbance activities that are expected to occur within the current scope of recommended remediation involve:

- Suites Concourse Level (5th and 6th Floors):
  - Ceiling tiles, drywall soffits
- Field Service Level
  - Ceiling tiles (2' by 2' and 2' by 4'), carpet flooring layers, and drywall walls
- Upper Mechanical Level
  - Drywall ceiling
- Club Level
  - Drywall walls, drywall soffits, ceiling tiles, carpet flooring layers

EFI will be collecting representative samples of the materials listed above on October 23, 2024, and provide further information to all parties once the available data has been received and reviewed.

CATEGORY 3 WATER TESTING

The IICRC's S500 Standard and Reference Guide for Professional Water Damage Restoration defines Category 3 Water as "grossly contaminated and can contain pathogenic, toxigenic or other harmful agents." According to the IICRC, Category 3 Water can include sewage and other water sources affecting indoor environments due to flooding from rising water from rivers and streams, seawater and groundwater which have contaminated structural materials or contents with pesticides, heavy metals or toxic organic substances", such as E. coli or fecal coliforms. In section 10.6.7, the standard also states that a qualified Indoor Environmental Profession (IEP) must be considered whenever any of the following conditions are present:

- Occupants are high risk individuals;
- A public health issue exists (e.g., elderly care or childcare facility, public buildings, hospitals);
- A likelihood of adverse health effects on workers or occupants;
- Occupants express a need to identify a suspected contaminant;
- Contaminants are believed to have been aerosolized; or
- There is a need to determine that the water actually contains contamination.

On October 22, 2024, EFI collected surface swab samples to evaluate the potential presence of Category 3 water indicators involving materials impacted by loss conditions. Once the results have been received from the laboratory, the data patterns will be reported to all parties and included within an updated protocol document.

GENERAL RESTORATION/REMEDIATION PROCESS

- Confirm and obtain the necessary Personal Protective Equipment (PPE) prior to the start of the project.
- Confirm the presence or absence of any regulated hazardous materials (such as asbestos or lead) prior to beginning remediation.
- Establish containment and necessary equipment to maintain environmental controls during remediation efforts throughout the duration of the project.

- Perform drying, cleaning, and/or removal, as indicated in **Attachment 1**.
    - In isolated situations, there may be limits on the practicality of complete removal of damaged drywall, such as the exterior side of exterior walls or the other side of adjacent common walls of unaffected units. Provided the drywall has sufficient structural integrity to meet fire protection code requirements, damaged drywall that is impractical to remove shall be thoroughly cleaned, treated with an appropriate disinfecting agent, and encapsulated with a microbial-resistant coating. Encapsulation will only be approved on a case-by-case basis and shall not be applied until the Industrial Hygienist has performed post-remediation verification.
- Inspect underlying substrates for additional damages. The contractor is responsible for documenting any additional damages above and beyond those detailed within the protocol as indicated in **Attachment 1**. Requests for deviations from or additional scope of work shall be provided in writing for evaluation and approval prior to performing additional demolition.
- Perform any necessary abrasive cleaning of exposed substrates as identified in **Attachment 1** to remove any visible mold. (This could include sanding, scraping, ice/soda blasting)
- Perform gross cleaning of bulk debris and materials remaining in the work area.
- Thorough detailed cleaning of remaining exposed surfaces within the work area, including any containment or critical barriers, via HEPA vacuuming and damp wiping methods after all removal and abrasive cleaning activities are complete.
- Where appropriate and approved by the Industrial Hygienist in writing prior to application, treat remaining walls and ceiling cavities with a microbial-resistant biocide. The application of an encapsulant or antimicrobial coating shall only be applied where approved on a case-by-case basis and shall not be applied until the Industrial Hygienist has performed post-remediation verification.
- Where impacted, heating, ventilation, and air conditioning (HVAC) systems should be evaluated by a National Air Duct Cleaners Association (NADCA) certified HVAC technician to determine the necessary recommendations and guidelines.
- Clean all remaining flooring within work areas as a final step prior to post-remediation clearance testing assessment.
- Once the Industrial Hygienist determines that remediation efforts are complete, containment and equipment may be removed from the project and/or work area.

PROJECT SUBMITTALS

Contractor shall provide the following to the Client prior to the start of the job:

- Notice of impending commencement of mold remediation work in the building to the building owner and operating business.
- Any required documentation to comply with the applicable state or local regulations.
- Insurance certificates for Remediation Contractor listing all coverages as required by Owner.
- Personnel Submittals:
    - Listing of supervisory personnel (including foremen) and workers to be utilized on the project. Listing shall be in alphabetical order and include each worker's social security number.
    - Awareness training documentation that each and every employee to be utilized on the project has been instructed on the potential hazards of mold exposure, protective dress, use of showers, entry to and exit from work areas and on all aspects of work procedures and protective measures regarding mold remediation.
    - Documentation that each and every worker to be utilized in the remediation activities is actively involved in an employee medical surveillance program for respiratory training.

Include copy of physician's written opinion for each person to be utilized in the remediation activities.

- Any additional submittals as required by state, local, or federal regulations related to regulated materials disturbance within the scope of services (e.g., asbestos or lead).

CONTAINMENT

The following containment guidelines referenced in this section apply to remediation of non-asbestos-containing-materials (ACM). The contractor should be responsible for ensuring any disturbance of ACM is conducted in accordance with all federal, state, and local regulations.

As a minimum standard, the EPA describes two (2) types of containment for mold remediation: Limited and Full. Limited containment is recommended for areas that contain greater than ten (10) square feet of mold, but less than one hundred (100) square feet of mold. Full containment is recommended in areas where greater than one hundred square feet of mold is present.

- At a minimum, containment consisting of critical barriers (i.e. HVAC supply vents, doorways, and/or access points) shall be utilized in any area where greater than ten (10) square feet of mold has been identified. Where excess dust and debris will be generated, critical barrier should also be utilized.
- Install critical barriers as necessary to protect equipment, interstitial spaces, HVAC, and other components throughout remediation efforts.
- Decontamination areas and containments should not be occupied.
- The work areas should not be entered by those without the proper level of PPE during remediation.
- Cautionary measures to prevent the spread of contamination should be taken during remediation.
- Critical barriers should be constructed of two layers of polyethylene plastic sheeting secured with duct tape or other means. Zipper doors should be used to allow access into the containment.
- Critical barriers must block all openings to prevent the spread of dust and spores beyond the containment areas.
- Complete isolation of each work area from non-work areas using plastic sheeting sealed with duct tape or other means is recommended. Other methods may be utilized as is prudent based upon the openings.
- The use of an exhaust fan with a HEPA filter to generate negative pressurization is highly recommended. Air should be exhausted outside if possible.
- Fresh air or HEPA-filtered air should be supplied into the work area at a volume of at least 3 to 5 air exchanges per hour.
- A pressure differential of greater than 5 Pa or 0.02 inch water gauge should be maintained between the work areas and non-work areas if possible.
- Personal contents that are not impacted are recommended to be removed from the work area prior to disturbance; however, in the event that removal is not feasible, contents should be protected within the work area by containment.
- Contaminated porous materials should be removed from the building in double sealed, 6 mil. plastic bags. Porous material includes drywall, most types of insulation, floor tiles, and most engineered wood products such as wood paneling and cabinetry.
- The outside of the bags should be cleaned with a damp cloth and a detergent solution in the decontamination chamber prior to removal from the containment.
- Where full containment is utilized, decontamination chambers should be constructed at entry/exit points to the work areas, especially interior entry/exit points. The unit may be single chambered or multi-chambered depending on the size and layout of the work area.

- Tacky mats should be used in the decontamination chamber(s) and any entry/exit point to the work areas to prevent dirt, dust, and spores from entering the work area. If the entry/exit is accessible directly from the outdoors, tacky mats are not necessary.
- Dehumidifiers should be used as needed in each work area to maintain humidity below 60% until remediation is complete and post remediation criteria is met, including receipt of confirmatory results.
- EFI recommends utilizing air-filtration devices (AFDs) during remediation and final cleaning and prior to post remediation testing.
- Prior to containment removal, acceptable post-remediation results should be obtained and the notification from the Industrial Hygienist has been provided.
- For projects with greater than ten (10) square feet of mold, notice signs advising that a mold remediation project is in progress shall be displayed at all accessible entrances to remediation areas. The signs shall be at least eight (8) inches by ten (10) inches in size and shall bear the words, "Notice: Mold Remediation Project in Progress" in black and yellow background. The text of the signs must be legible from a distance of ten (10) feet.

TOOLS AND EQUIPMENT

Provide suitable tools and equipment for executing remediation activities. The following tools are commonly utilized during remediation projects; however, not all tools and equipment listed below may be required for all elements of this project:

- Air Purifying Equipment: HEPA Filtration Systems. Verify that no internal air movement system or purification equipment exhausts contaminated air from inside the work area into uncontaminated areas.
- Disposable Clothing: Utilize disposable clothing constructed of suitable materials such as DuPont Tyvek or equivalent.
- Disposable HEPA Filter Cartridges: Utilize, as a minimum, HEPA filter cartridges color-coded in accordance with ANSI Z88.2 bearing the appropriate approval number from both MSHA and NIOSH for dusts, fumes, mists and radionuclides.
- Half-Face/Full Face Respirator Equipment: Utilize, as a minimum, negative pressure, half-face air purifying respirators approved by NIOSH or MSHA for the contaminants encountered. Full-face respirators may also be required during media blasting.
- HEPA-Filtered Vacuum: Vacuum equipment equipped with a HEPA filtration system.
- Personal Protective Equipment: Utilize suitable personal protective equipment including disposable clothing, headgear, eye protection, work gloves and footwear of sizes to properly fit individual workers or authorized visitors.
- Scrapers and Brushes: As required to clean wood members, air handling units, ductwork, etc.
- Water Sprayer: Utilize airless or other low-pressure sprayer for water mist application.
- Media blasting – dry ice particles (frozen carbon dioxide / frozen CO2) or other approved media propelled by compressed air to supersonic speed, impacting and cleaning a surface.
- Cleaning agents – Environmental Protection Agency (EPA) registered biocides or hydrogen peroxide-based cleaning products for use on nonporous and semi-porous surfaces.
- Anti-microbial/mold-resistant coatings – EPA registered coatings for hard-to-clean, non-porous and semi-porous materials as approved on a case-by-case basis.
- Disposable towels or equivalent for wiping down surfaces.
- Fire Extinguishers: Have at least 2 fire extinguishers with a rating of at least 10A at each work site.

DISINFECTANTS AND COATINGS

The remediation activities may include the use of disinfectants on items and surfaces to remain in or be

returned to the remediated areas. The use of encapsulants will be approved on a case-by-case basis and will only be applied following detailed cleaning by the contractor and inspection by the Industrial Hygienist. All disinfectants and/or coatings utilized shall be EPA-registered for such use and compatible with the type of material they are being applied. The remediation contractor must ensure that all disinfectants are applied and used per their manufacturers' directions, including any surface preparation requirements, dilution ratios and minimum contact times.

PRODUCTS

The following products are commonly utilized during mold remediation projects; however, not all products listed below may be required for this project:

- Hydrogen Peroxide Cleaning Solution: Apply a hydrogen peroxide cleaner, such as Serum, Fiberlock IAQ 1000 or other EPA registered equivalent to all impacted building materials not scheduled for removed. Cleaning solution shall be mixed and applied according to manufacturer's instructions.
- Disinfectants: Apply disinfectants, such as Microban, Fiberlock, or other EPA registered equivalent to all non-porous and semi-porous materials in the work areas. Cleaning solution shall be mixed and applied according to manufacturer's instructions.
- Biocides: Apply biocides such as Sporicidin, or other EPA registered equivalent to all impacted hard surfaces. Biocides shall be applied according to the manufacturer's instructions. Application of any biocide must be applied by properly trained personnel and only in unoccupied buildings or contained areas. Biocide application must comply with all local, state, provincial, or federal licensing requirements.
- Anti-Microbial Coating – Fiberlock, Serum, Fosters 40-20, or approved equivalent.
- Other Products: As approved by Owner's Representatives.
- Owners must be advised of any product being applied in their living environment.

REMEDIATION PERSONNEL

- A qualified contractor possessing relevant certifications to perform remediation services (e.g., IICRC) should be retained for this project.
- Use of personnel trained in the handling of hazardous materials and equipped with personal protective equipment (PPE) is advised. If additional regulated hazards are present, additional requirements may supersede the recommendations within this protocol.
- Permit no visitors, except for governmental inspectors having jurisdiction, or as authorized by Client or Owner, in work areas after commencement of cleaning and decontamination.
- PPE – Remediation workers are advised to use respiratory protection while engaged in material removal, cleaning, or sanding activities inside the contained areas. A minimum of N95 masks are recommended within most work areas; however, a half or full-face respirator is necessary when performing activities generating excessive dust. Level D coveralls (i.e., TyvekTM) or other outer covering are recommended to protect clothing, hair, and skin from work area dust and debris. Heavy shoes or boots are always recommended in construction areas. Goggles are recommended for eye protection during the use of powered equipment or other dust generating activities.

PERSONAL PROTECTION EQUIPMENT

- The Contractor is responsible for ensuring that all workers adhere to applicable safety regulations in accordance with OSHA requirements.

- Remediation Contractor shall provide workers with personally issued and marked respiratory equipment. When respirators with disposable filters are used, provide sufficient filters for replacement as necessary by the workers, or as required by applicable regulations.
- Provide respiratory protection from the time of the first operation involved in the Project requiring contact with contaminated substances until completion of final visual observation by an industrial hygienist.
- Remediation workers are advised to use respiratory protection while engaged in material removal, cleaning, or sanding activities inside the contained areas. Half-face respirators with P100 cartridges are recommended for personnel.
    - As a minimum, Remediation Contractor shall utilize N-95 type respirators.
    - A half face or full-face respirator are recommended when performing actions generating higher particulate quantities.
- Level D disposable protective clothing (i.e. Tyvek) covering both head and shoes, gloves and eye protection are recommended.
- Safety toe boots are always recommended in construction areas.
- Provide authorized visitors with suitable protective clothing and respirators.

REMEDIATION AREAS

Refer to **Attachment 1** detailing the scope of remediation for storm-related damages associated with the property. The Restoration Contractor may also use this protocol for guidance to address water and mold damages that have not been specifically identified in this protocol.

REMEDIATION PROTOCOL

- The Remediation Contractor shall survey existing conditions and review this protocol in its entirety to determine extent of Scope of Work.
- If required, Remediation Contractor shall place lock-out tags on electrical breakers of equipment which will be cleaned in order to prevent accidental start-up, if applicable.
- Remediation Contractor shall perform surveys as the Work progresses to detect hazards resulting from cleaning activities.
- Remediation Contractor shall utilize methods to minimize the release and spread of mold/water damaged debris during the work. These methods shall include installation of the work area containment, biocide treatment of visible areas of mold/water damaged debris prior to handling of the materials, and containerization of all waste debris and used cleaning materials.
- Set up containment in accordance with the **Error! Reference source not found.** Section of this report. Make sure to contain areas of mold growth from all adjacent areas.
- Install critical barriers (to segregate work area and at penetrations, ceiling openings, etc.) and seal all HVAC duct openings and equipment within work area with a minimum of one layer of 6-mil plastic sheeting. Prior to installation of critical barriers, wet clean and HEPA-vacuum surfaces to be protected.
- Place construction warning/barrier tape and post construction warning signs around the work area in compliance with any local or state regulation requirements.
- Maintain emergency and fire exits from the work areas. Provide fire extinguishers inside and outside the work area. One fire extinguisher should be placed a minimum of every 100 feet within the work area.
- Provide proper decontamination of personnel, all equipment (water/mold sprayer, towels, etc.) and disposal bags, etc. prior to exiting the work area or removing materials from the work area through the critical barrier at the doorway or designated exit location. Protective disposable

clothing shall be worn while in work area. Maintain respiratory protection throughout the decontamination process.

- Set up air scrubbers inside containment in conjunction with negative air filtration devices during all work activities where mold disturbance is occurring. Air should be exhausted outdoors, if possible. Place scrubber units in the work area utilizing HEPA filtration systems which comply with ANSI Z9.2-79, local exhaust ventilation. Maintain units in the work area continuously (24 hours per day) from the start of cleanup activities until the completion of cleaning. Ensure that the air within the workspace is exchanged at least once every 15 minutes.
- Dehumidifiers should be used as necessary to maintain relative humidity below 60% during the remediation process.
- Perform cleaning and/or removal, as indicated in **Attachment 1**. Materials indicated for removal and disposal such as wallboard, ceiling board, and wall or ceiling insulation shall be bagged or wrapped in plastic prior to removal from the work area.
- Continue removal of drywall approximately two (2) feet beyond any visible mold/water damage.
- Exposed wood framing that exhibits wood rot and does not appear to be structurally sound should be evaluated by a structural engineer or similarly qualified personnel to evaluate salvageability or to determine the appropriate repair versus removal and replacement.
    - This recommendation is not intended to associate any unrelated historical or pre-existing damages with the loss.
- The exposed wood members impacted by mold that are determined to be salvageable, should be HEPA vacuumed and wiped down with an EPA-registered biocide solution to remove any surface growth.
- Apply a hydrogen peroxide cleaning solution (Fiberlock IAQ 1000, Anabec, or equivalent) to all salvageable wood framing exhibiting visible mold growth. Manually clean the exposed surfaces and associated items (framing members, walls, wall sheathing, piping, conduits, etc.) as needed using nylon brushes and disposable towels.
- Following the removal and abrasive cleaning activities, HEPA vacuum all surfaces to remove gross accumulation of dust and debris. Excess dust or debris accumulations in the work areas shall be vacuumed, bagged, and removed from the work area.
- Dry any wood framing to remain below 17% moisture content (MC) or the site-specific threshold appropriate for the project/area.
- Wipe down all remaining surfaces with an EPA-registered antimicrobial appropriate for each material in accordance with manufacturer's specifications and allow to dry.
- HEPA vacuum all surfaces as part of the final cleaning.
- Where greater than ten (10) square feet of visible mold is observed:
    - Air scrubbing with an AFD should occur for a minimum of 24 to 48 hours following any mold remediation after cleaning is complete.
- All AFDs should be shut down 12-24 hours prior to post remediation testing.
- If necessary, once the work area has met all post-remediation clearance criteria and upon written approval by the Industrial Hygienist, an EPA registered anti-microbial encapsulant may be applied to impacted substrate where visible mold growth was identified.

TARGET DRYING MATERIALS

Once demolition is complete, the remaining substrates should be dried to the appropriate level to ensure that drying goals are met. Any deviations from typical drying goals for specific substrates is listed below:

- Concrete subfloors and CMU block should be less than 5% as measured by a TRAMEX CME5 or comparably calibrated concrete moisture meter.

- Wood framing or substrates should be less than 17% on the wood moisture equivalent (WME) scale.
- Other substrates will be evaluated using an appropriate meter of best fit to the substrate while accounting for site-specific baseline conditions.

SEQUENCING OF PROTOCOL EVENTS

- Confirm the presence or absence of any regulated hazardous materials (such as asbestos or lead) prior to beginning remediation, including suspect materials where sampling data is not available.
- Confirm and obtain the necessary Personal Protective Equipment (PPE), tools and equipment, disinfectants and coatings, and products prior to the start of the project.
- Establish containment and necessary equipment to maintain environmental controls throughout remediation efforts.
- Perform drying and/or removal, as indicated in **Attachment 1**.
- Inspect underlying substrates for additional damage. The contractor is responsible for documenting any additional damages above and beyond those detailed within the protocol as indicated in **Attachment 1**. Requests for deviations from or additional scope of work shall be provided in writing for evaluation and approval prior to performing additional demolition.
- Perform any necessary abrasive cleaning of exposed substrates as identified in **Attachment 1**.
- Perform gross cleaning of bulk debris and materials remaining in the work area.
- Thorough detailed cleaning of remaining exposed surfaces within the work area, including any containment or critical barriers, via high-efficiency particulate air (HEPA) filter vacuuming, wiping methods after all removal and abrasive cleaning activities are complete.
- The application of an encapsulant or coating shall only be applied where approved or specified and shall not be applied until the Industrial Hygienist has performed post-remediation verification of underlying surfaces.
- The heating, ventilation, and air conditioning (HVAC) systems identified in the protocol or within the scope of remediation areas should be evaluated by licensed HVAC contractor which possess NADCA certified staff or comparable credentials to determine the necessary recommendations and guidelines.
- Clean all remaining flooring within work areas as a final step prior to post-remediation clearance testing assessment.
- Once the Industrial Hygienist determines that remediation efforts are complete, containment and equipment may be removed from the project and/or work area.

POST-REMEDIATION FIELD QUALITY CONTROL

The Remediation Contractor is responsible for documenting remediation progress throughout the project. At a minimum, documentation should include the following:

- Daily logs of personnel onsite, work performed, and areas completed by day.
- Inventory of equipment onsite by location, as well as run logs, if applicable.
- Daily temperature and relative humidity readings where equipment is in use.
- Photographs of remediation progress.
- Written and photograph documentation describing conditions that deviate from this protocol.
- Written and photograph documentation of any unforeseen conditions discovered during remediation efforts that will impact the remediation scope of work or schedule.

The Remediation Contractor is to inspect the work area surfaces before and after their cleaning process for quality control of work. After confirmation, the contractor should then notify the Industrial Hygienist that the work area is ready for final inspection. If the work area fails to meet post-remediation clearance

criteria and the Industrial Hygienist, based on their opinion, determines that the Restoration Contractor has not adequately executed the procedures of this protocol, the Restoration Contractor shall perform additional cleaning of areas at their own cost.

POST REMEDIATION VERIFICATION

Post remediation assessment is recommended before containment is removed and new building materials brought to the site. Where applicable, EFI recommends conducting sampling in work areas following remediation and prior to resuming construction at the site.

- Following the completion of work, the Industrial Hygienist will conduct a visual inspection of the work area, including a thermal screening and testing with a moisture meter to ensure that no elevated moisture is present for the remaining substrates. The work area will meet visual inspection criteria once the following conditions are met:
    - Scope of work indicated in **Attachment 1** has been completed.
        - Exceptions may be approved at the discretion of the Industrial Hygienist.
    - The underlying cause has been identified and repaired.
    - The work area is free of all visible dust and debris.
    - All remaining substrates are confirmed to be dry.
    - There is no visible mold in the work area.
    - If visible mold was identified in a work area, additional mold testing is recommended.
- Once the Industrial Hygienist determines that the work area meets visual criteria, the Industrial Hygienist shall perform post-remediation inspection/testing inside the work area following completion of the work. The Remediation Contractor will coordinate and assist Industrial Hygienist with any testing in the work area.
- Post remediation mold testing is recommended in areas where visible mold has been identified. In order to confirm that remediation activities were sufficient and complete, testing would include the collection of surface samples from representative areas using tape sampling methods.
- Post-remediation samples collected will be delivered directly or overnighted to the laboratory and analyzed on an expedited turnaround to be determined at the time of testing.
- EFI relies upon proposed guidelines published in The Synergist (Clark, G., The Synergist, November 2001) which were later updated in 2005. The proposed guidelines include quantitative recommendations that address multiple sampling methods and provided threshold levels that indicate Normal Background, Possible Contamination Source, and Probable Contamination Source. Using these guidelines provided in Table 1 of the publication, EFI established the following evaluation criteria:
    - Absence of any significant fungal material/contamination.
    - 10,000 total spores per square inch (spores/in^2) or less (1,500 spores/cm^2).
    - 5,000 *Aspergillus/Penicillium* spores/in^2 or less (750 spores/cm^2).
    - Absence of elevated concentrations of indicator species.
    - No fungal amplification of mold spores is identified.
- If Category 3 conditions are identified, post remediation testing will include the collection of surface samples from representative surfaces using swab sampling media for bacterial analysis. Results will be evaluated based upon the following criteria:
    - Absence of indicator species of bacteria such as *E. coli*, *Enterococcus, or Fecal Coliforms*.
- The work area and all other decontaminated areas will be considered acceptable once the area meets both visual and analytical criteria.
- Following notice from Industrial Hygienist that cleaning is complete, the contractor may proceed with dismantling of the work area.

DISMANTLING OF WORK AREA

- Following completion of cleanup activities, dismantle all plastic sheeting barriers and decontamination unit. If applicable, dismantle construction barrier.
    - Clean behind any containment tape applied to materials to address incidental deposition of particulate.
- Dispose of debris from cleanup operation, used cleaning materials, unsalvageable materials used for sturdy barriers, and any other remaining materials. If additional regulated hazards are present, additional disposal requirements may supersede the recommendations within this protocol. The contractor should follow the applicable federal, state, and local requirements for disposal.

LIMITATIONS

The information presented in this protocol addressed the limited objectives related to the evaluation of the Subject Property. This protocol only describes the conditions present at the time of our evaluation and is based upon a visual inspection of the Subject Property. Removal of finish materials, qualitative testing, excavation, or other work not specifically described herein was not conducted. This protocol is not intended to fully delineate or document every defect or deficiency throughout the Subject Property. If any additional information is encountered which relates to this evaluation, EFI reserves the right to alter the recommendations contained in this protocol. The recommendations contained within this protocol are limited to the circumstances associated with this assignment. Our services have been performed using that degree of skill and care ordinarily exercised under similar conditions by reputable members of EFI's profession practicing in the same or similar locality at the time of performance. In some cases, additional investigation(s) may be warranted to fully evaluate concerns noted.

The findings noted herein do not constitute a scope of work for repair or offer of repair. Detailed design documents should be prepared to accurately reflect the scope of any repair work and competitive bids be obtained to determine actual repair costs. All means and methods of construction are the responsibility of others and not that of EFI. If necessary, existing portions of the building should be properly supported and stabilized during the remediation process.

Any verbal statements made before, during, or after the course of the assessment were made as a courtesy only and are not considered a part of this protocol. This protocol is furnished as privileged and confidential to the addressee. Release to any other company, concern, or individual is solely the responsibility of the addressee. EFI makes no interpretations, diagnosis, analysis, and/or statements regarding human health effects from past, present, or future exposures of any kind in the subject structure.

CLOSING

EFI appreciates this opportunity to provide consulting services in this matter. Please contact us should any questions arise concerning this report, or if we may be of further assistance.

Sincerely,
EFI Global Inc.,

Respectfully submitted by:



Jesus D Cardenas, CIE
Florida Mold Related Services Assessor
Environmental Advisor, EFI Global
(License #: MRSA3981, Exp: 07/31/2026)

Technical Review by:



Elizabeth Witten, CMC, CMRS
Senior Environmental Principal
Large Complex Loss

efi global

ATTACHMENT 1

DAMAGE DIAGRAMS

Legend

	Water-impacted walls
	Mold-impacted walls
	Water-impacted ceilings
	Mold-impacted ceilings
	Impacted flooring
	Impacted furniture, fixtures, and equipment (FFE)
	Pre-existing damages on walls
	Pre-existing damages on ceilings
	Walls removed prior to assessment.
	Ceilings or floors removed prior to assessment.
	Establish containment for remediation
	Remove all interior finishes throughout identified areas.
	Shaded areas not accessible during assessment.
	Cleaning of all exposed surfaces

Damages Code Key

Where applicable, each protocol line item will be assigned a damage code corresponding to the appropriate remedial action recommended by EFI. Each code will consist of three (3) digits which will indicate the following:

1st Digit: The first digit indicates either removal or cleaning of the substrate.

2nd Digit: The second digit identifies the location of the substrate (i.e. ceiling, soffit throughout identified areas, wall, baseboard, or flooring)

3rd Digit: The third digit will indicate the type of substrate and will correspond with the scope of work provided in the substrate code table on the following slide.

RW1

1st Digit	2nd Digit		3rd Digit
R – Removal C – Cleaning D – Drying	C – Ceiling M – Millwork S – soffit throughout identified areas W – Wall B – Baseboard	F – Flooring X – Contents/Fixtures H – HVAC AF – All Finishes I - Insulation	Corresponds to the indicated # on the Substrate Table

Ex. RW1 Remove wall, gypsum board
RC2 Remove ceiling, drop ceiling tile
CF4 Clean flooring, carpet
RAF20 Remove all finishes, except…..(list exceptions)

Damage Diagrams

Sedgwick Loss Adjusting
City of St. Petersburg – Tropicana Field
1 Tropicana Dr.
St. Petersburg, Florida
Claim No. / Client File No.: Market Loss

EFI File No.: 032.05366
Inspector(s): JC, HM, JA, KP, MP, TM
Inspection Date(s): October 21, 2024

efi global

Key: **Applicable** Not Applicable for this project

Substrate Codes

1	Gypsum Board	R	Remove gypsum board, as indicated. Remove all fasteners, coverings, wall cavity insulation, and if necessary, baseboards directly associated with removed gypsum board. Inspect wall cavity studs for additional water and/or mold damages. If necessary, sand visible dark staining observed on wood studs. Remove any bulk dust and debris within the wall cavity and clean via HEPA vacuum and wiping with an EPA-registered biocide compatible with the remaining substrates.
		C	Clean indicated area by HEPA vacuuming followed by wiping with an EPA-registered biocide. If present, inspect behind any wall covering to confirm there are not additional damages. Ensure area dries to the appropriate standard.
2	Ceiling Tile	R	Remove and discard impacted ceiling tiles, as noted (Quantity indicated on diagram provided).
		C	Not applicable.
3	Wood, Plywood, or Oriented Strand Board (OSB)	R	Remove wood substrate, as indicated. Inspect underlying surface for additional water and/or mold damages. Clean exposed surfaces with a HEPA vacuum and wiping with an EPA-registered biocide compatible with the remaining substrates.
		C	Sand visible dark staining observed in the indicated area. Clean wood with a HEPA vacuum and wiping with an EPA-registered biocide compatible with the remaining substrates.
4	Carpet	R	Remove carpet, as indicated. Inspect underlying surface and tack strips for additional water and/or mold damages. Clean exposed surfaces with a HEPA vacuum and wiping with an EPA-registered biocide compatible with the remaining substrates.
		C	HEPA vacuum the indicated area followed by cleaning via hot water extraction. Ensure carpet is appropriately dried.
5	Vinyl, Linoleum, or Rubber	R	Remove vinyl, as indicated. Inspect underlying surface for additional water and/or mold damages. Clean exposed surfaces with a HEPA vacuum and wiping with an EPA-registered biocide compatible with the remaining substrates.
		C	Clean vinyl with an EPA registered biocide.
6	Plaster	R	Remove plaster as indicated. Remove all fasteners, coverings, wall cavity insulation, and if necessary, baseboards directly associated with removed plaster. Inspect wall cavity studs for additional water and/or mold damages.
		C	Clean indicated area by HEPA vacuuming followed by wiping with an EPA-registered biocide. If present, inspect behind any wall covering to confirm there are not additional damages. Ensure area dries to the appropriate standard.

Key: **Applicable** Not Applicable for this project

Substrate Codes

7	Concrete, Stone, Brick, or Concrete Masonry Unit (CMU)	R	Remove impacted substrate, as indicated in the protocol, including all associated stone, mortar, and loose debris.
		C	Clean substrate with HEPA vacuum followed by wipe with an EPA registered biocide.
8	HVAC System/ Ducting	R	Remove impacted ducting and/or air handing unit, as indicated, including all associated insulation, foil, gaskets, and fasteners.
		C	Clean impacted hard duct and/or air handling unit as indicated in accordance with NADCA protocols.
9	Contents/ Fixtures	R	Remove and dispose of impacted contents as detailed within the protocol.
		C	Clean impacted fixtures as indicated in the protocol.
10	Gypcrete	R	Remove impacted gypcrete and loose debris, where indicated in the protocol, followed by cleaning the underlying subfloor with a HEPA vacuum and wiping with an EPA registered biocide.
		C	Clean gypcrete with HEPA vacuum followed by wipe with an EPA registered biocide.
11	Ceramic or Glass Tile	R	Remove impacted tile and associated adhesive followed by cleaning the underlying substrate with a HEPA vacuum and wiping with an EPA registered biocide. Inspect the underlying substrate for additional damages and structural integrity, if necessary.
		C	Clean tile substrate with HEPA vacuum followed by wipe with an EPA registered biocide. Ensure underlying substrate is adequately dried.
12	Marble	R	Remove marble slab intact, if possible, and inspect underlying substrate for additional damages. If the slab is salvageable, clean marble slab with a HEPA vacuum and an EPA registered biocide.
		C	Clean marble substrate with HEPA vacuum followed by wipe with an EPA registered biocide. Ensure underlying substrate is adequately dried.

Key: **Applicable** Not Applicable for this project

Substrate Codes

14	Fiberglass-reinforced polymer (FRP) panels	R	Remove FRP wall covering as indicated, including all fasteners. Inspect underlying substrate for additional water and/or mold damages. Additional recommendations may be necessary to address underlying substrate.
		C	Clean indicated area by HEPA vacuuming followed by wiping with an EPA-registered biocide. If present, inspect behind any wall covering to confirm there are not additional damages. Ensure area dries to the appropriate standard.
15	Metal	R	Remove metal components intact, if possible, and inspect underlying substrate for additional damages. If the metal components are salvageable, clean the metal with a HEPA vacuum and an EPA registered biocide.
		C	Clean metal components with HEPA vacuum followed by wipe with an EPA registered biocide. Ensure underlying substrate is adequately dried.
16	Cork	R	Remove impacted cork material and loose debris, where indicated in the protocol, followed by cleaning the underlying substrate with a HEPA vacuum and wiping with an EPA registered biocide.
		C	Not applicable.
17	Cellulose and Fiberglass (Fibrous) Insulation	R	Remove impacted insulation material, as described in the protocol. HEPA vacuum all loose debris and wipe the remaining substrates, with a dry chemical sponge.
		C	Not applicable.
18	Spray Foam or Foam Board Insulation	R	Remove impacted insulation material, as described in the protocol. HEPA vacuum all loose debris and wipe the remaining non-porous substrates, if present, with an EPA registered biocide.
		C	Ensure material is structurally intact and clean material with a HEPA vacuum followed by a light wiping with a clean rag dampened with an EPA registered biocide.
19	Fireproofing	R	Remove impacted fireproofing, as described in the protocol. HEPA vacuum all loose debris and wipe the remaining non-porous substrates, if present, with an EPA registered biocide.
		C	Not applicable.
20	All Interior Finishes	C	Following all other removal activities clean all exposed surfaces as specified in the protocol diagrams.
		C	Not applicable.

Main Concourse

Damage Diagrams

Sedgwick Loss Adjusting
City of St. Petersburg – Tropicana Field
1 Tropicana Dr.
St. Petersburg, Florida
Claim No. / Client File No.: Market Loss

EFI File No.: 032.05366

Inspector(s): JC, HM, JA, KP, MP, TM

Inspection Date(s): October 21, 2024

efi global

Building Overview – Main Concourse

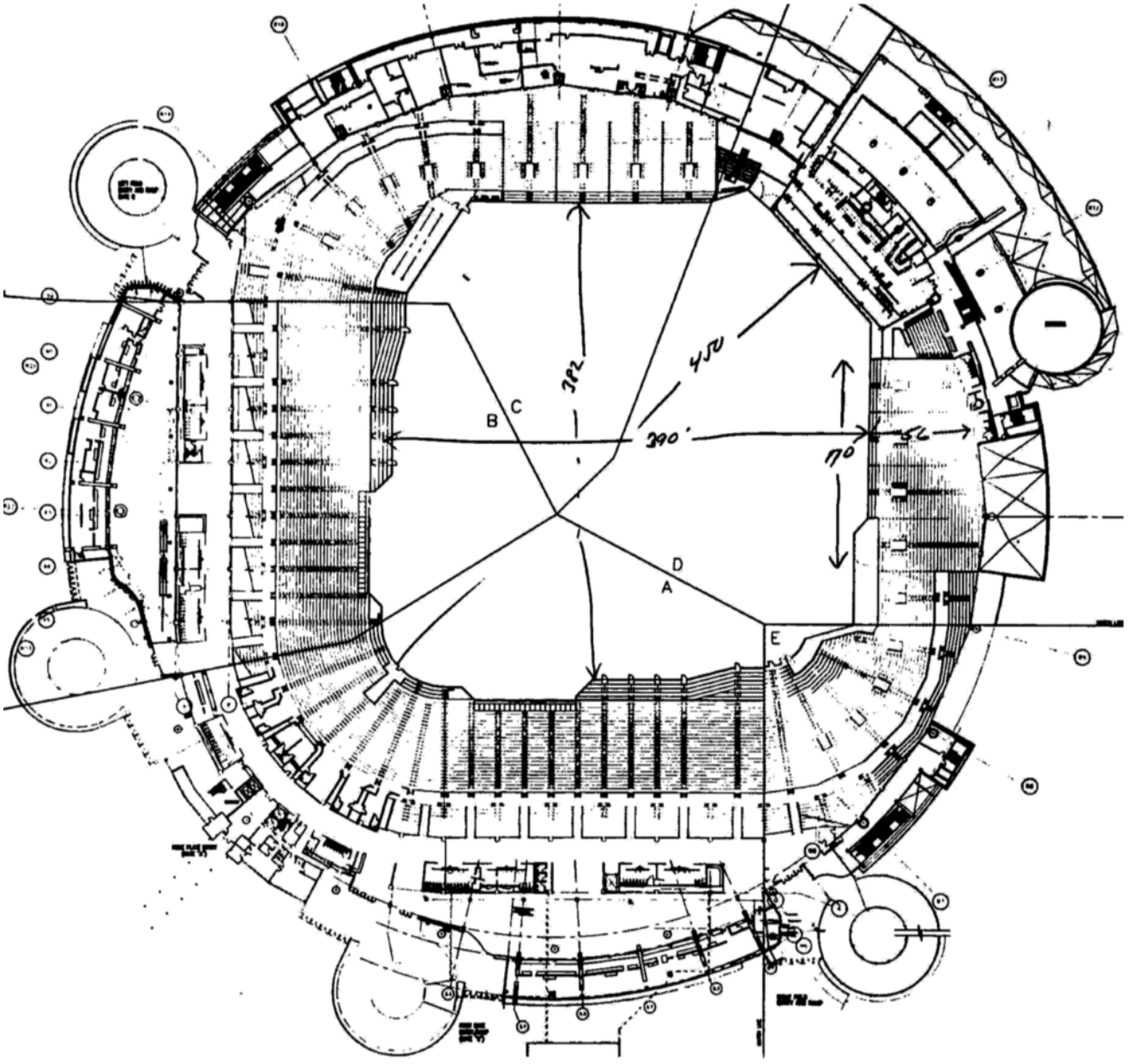

Damage Diagrams

Sedgwick Loss Adjusting
City of St. Petersburg – Tropicana Field
1 Tropicana Dr.
St. Petersburg, Florida
Claim No. / Client File No.: Market Loss

EFI File No.:
032.05366

Inspector(s):
JC, HM, JA, KP, MP, TM

Inspection Date(s):
October 21, 2024

efi global

Suites Concourse Level (5th and 6th Floors)

Damage Diagrams

Sedgwick Loss Adjusting
City of St. Petersburg – Tropicana Field
1 Tropicana Dr.
St. Petersburg, Florida
Claim No. / Client File No.: Market Loss

EFI File No.: 032.05366

Inspector(s): JC, HM, JA, KP, MP, TM

Inspection Date(s): October 21, 2024

efi global

Building Overview – Suites Concourse Level

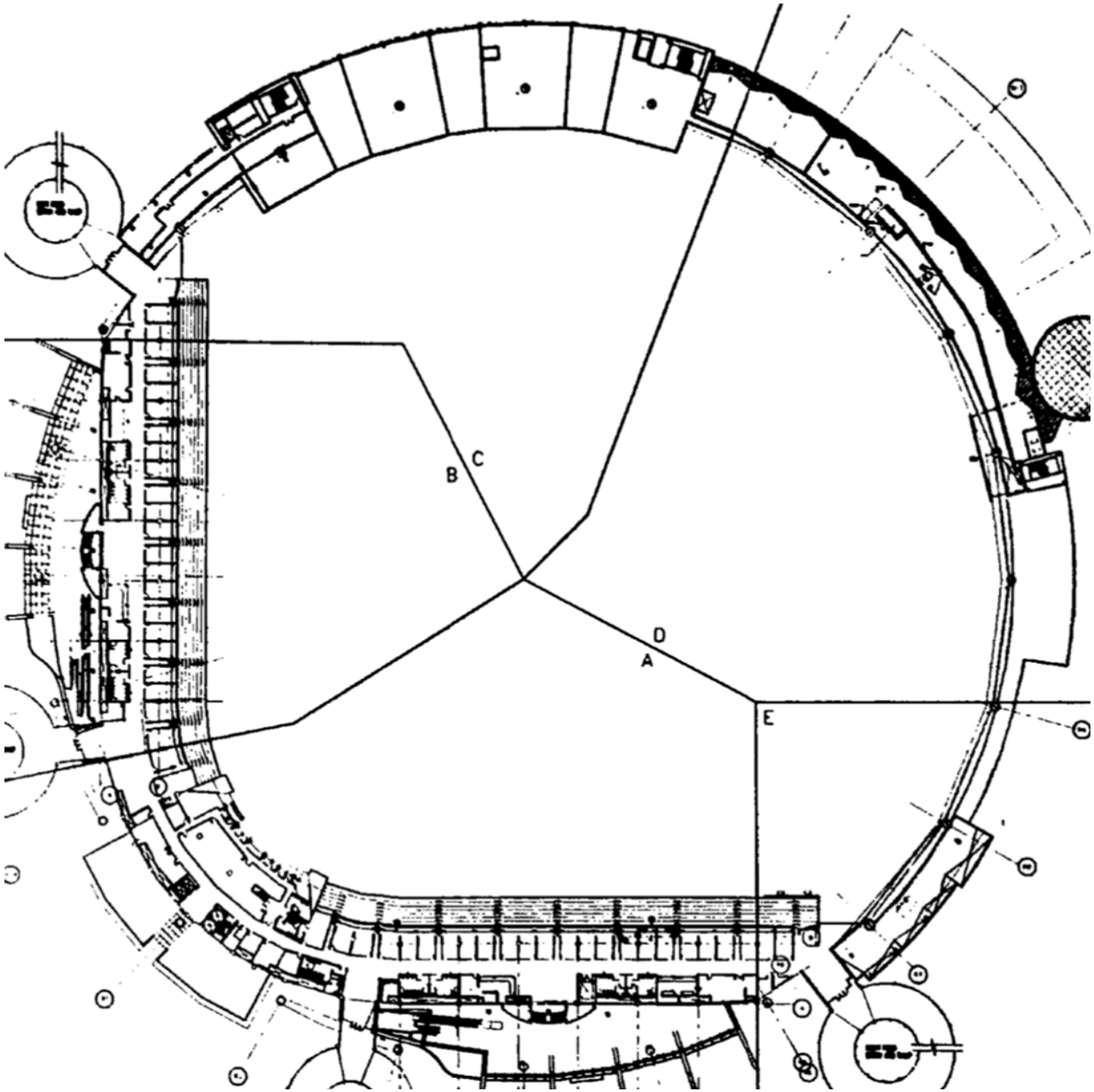

Damage Diagrams

Sedgwick Loss Adjusting
City of St. Petersburg – Tropicana Field
1 Tropicana Dr.
St. Petersburg, Florida
Claim No. / Client File No.: Market Loss

EFI File No.: 032.05366

Inspector(s): JC, HM, JA, KP, MP, TM

Inspection Date(s): October 21, 2024

efi global

5th Floor (200 Level) – Northeast

1. CF4: Clean flooring as depicted.
2. RC2: Remove 23 ceiling tiles (total) throughout identified areas.

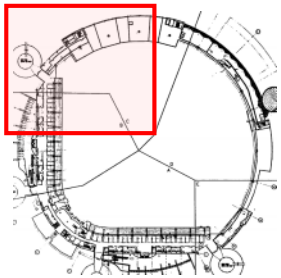

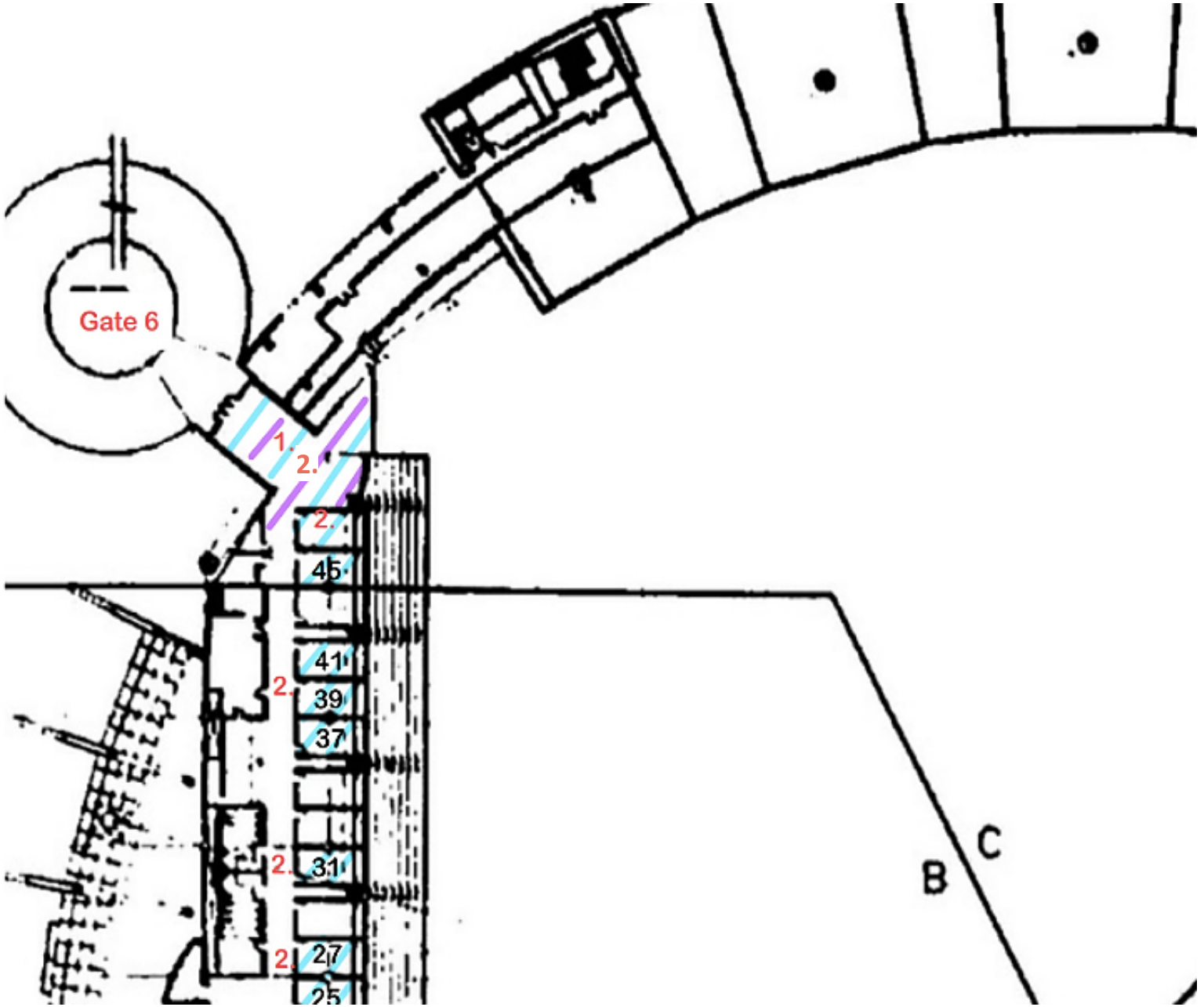

Damage Diagrams

Sedgwick Loss Adjusting
City of St. Petersburg – Tropicana Field
1 Tropicana Dr.
St. Petersburg, Florida
Claim No. / Client File No.: Market Loss

EFI File No.: 032.05366

Inspector(s): JC, HM, JA, KP, MP, TM

Inspection Date(s): October 21, 2024

efi global

6th Floor (300 Level) – Northwest

1. CC9: Clean light fixtures within identified areas (6 total).
2. CF7: Clean flooring as depicted.
3. RS1: Remove soffit throughout identified areas as depicted.

Work performed prior to EFI's assessment:

A. Ceiling tiles removed throughout identified areas.

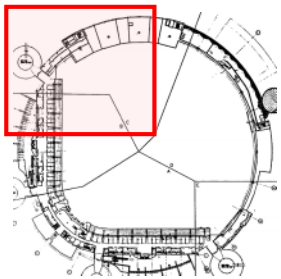

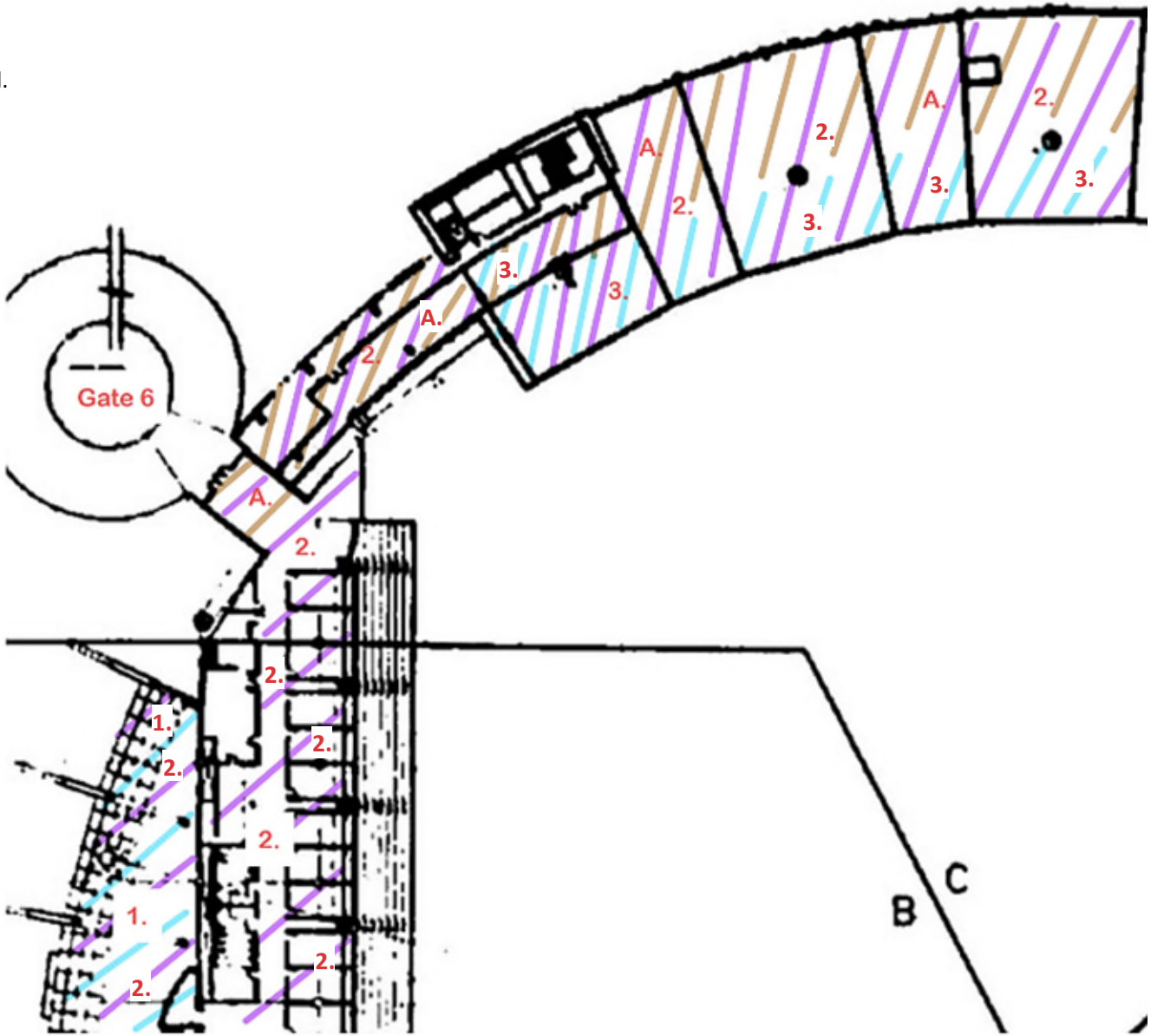

Damage Diagrams

Sedgwick Loss Adjusting
City of St. Petersburg – Tropicana Field
1 Tropicana Dr.
St. Petersburg, Florida
Claim No. / Client File No.: Market Loss

EFI File No.: 032.05366

Inspector(s): JC, HM, JA, KP, MP, TM

Inspection Date(s): October 21, 2024

efi global

6th Floor (300 Level) – Northeast

1. CF7: Clean flooring as depicted.
2. RS1: Remove soffit throughout identified areas.

<u>Work performed prior to EFI's assessment:</u>

A. Ceiling tiles removed throughout identified areas.

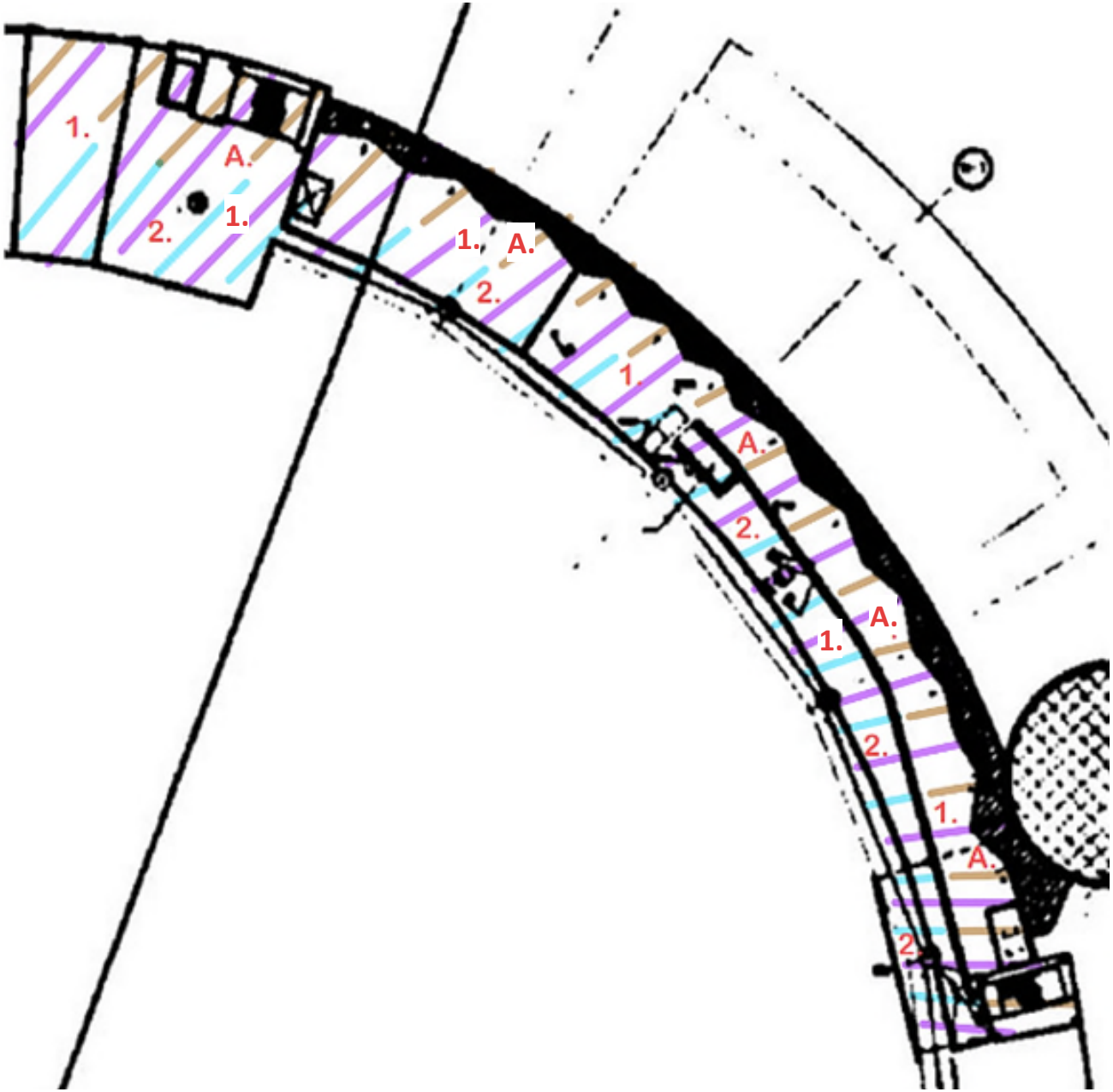

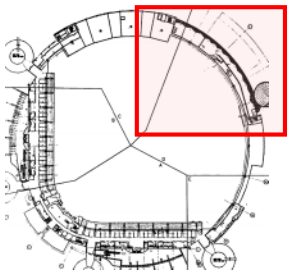

Damage Diagrams

Sedgwick Loss Adjusting
City of St. Petersburg – Tropicana Field
1 Tropicana Dr.
St. Petersburg, Florida
Claim No. / Client File No.: Market Loss

EFI File No.: 032.05366

Inspector(s): JC, HM, JA, KP, MP, TM

Inspection Date(s): October 21, 2024

efi global

6th Floor (300 Level) – Southeast

1. RC2: Remove 2’ by 2’ ceiling tiles (5 total) and 2’ by 3’ ceiling tiles (3 total).
2. CF7: Clean flooring as depicted.

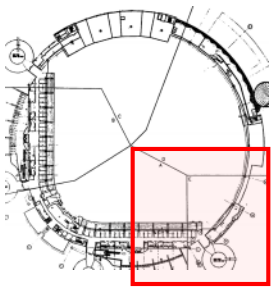

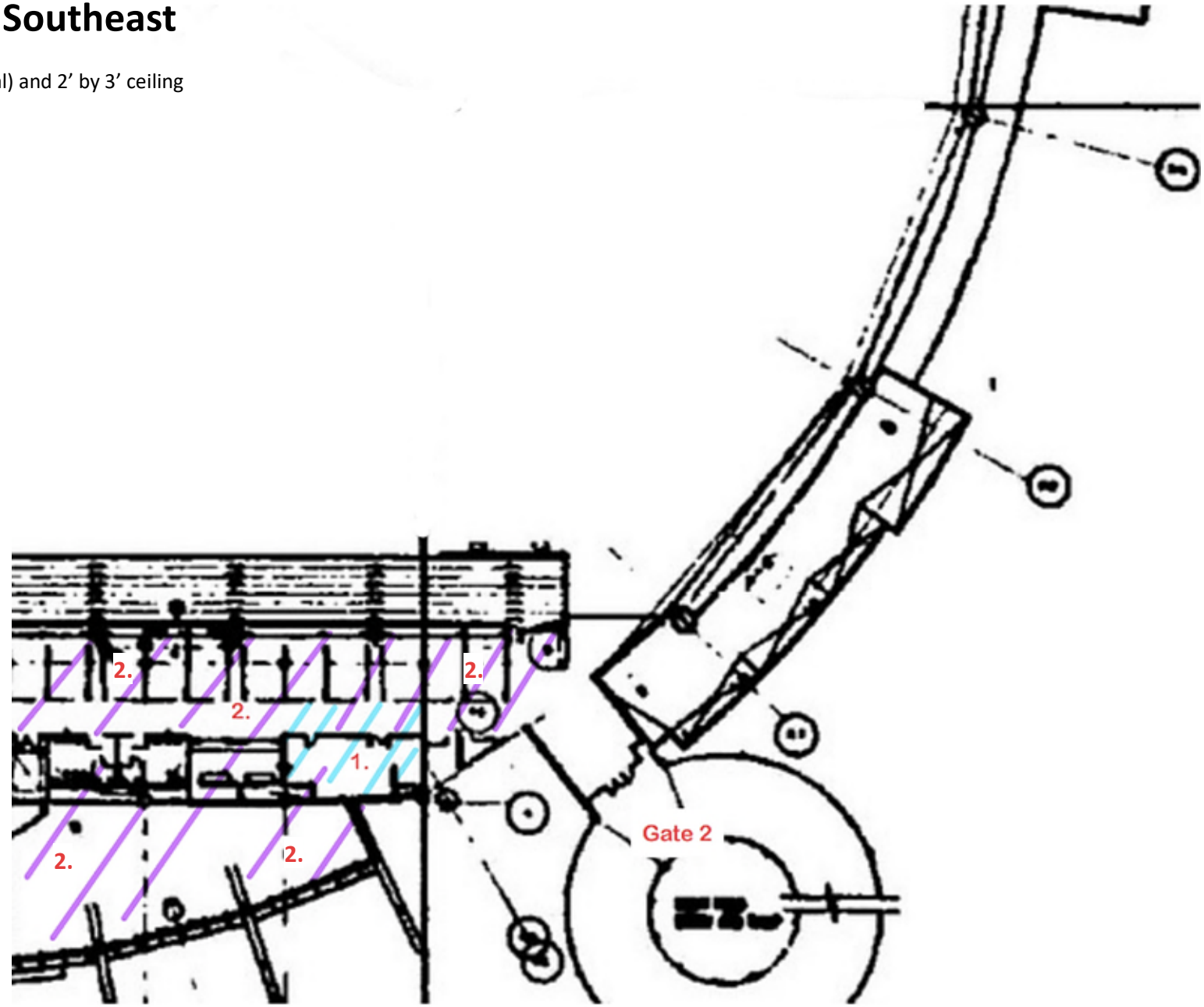

Damage Diagrams

Sedgwick Loss Adjusting
City of St. Petersburg – Tropicana Field
1 Tropicana Dr.
St. Petersburg, Florida
Claim No. / Client File No.: Market Loss

EFI File No.: 032.05366

Inspector(s): JC, HM, JA, KP, MP, TM

Inspection Date(s): October 21, 2024

efi global

6th Floor (300 Level) – Southwest

1. CF7: Clean flooring as depicted.

Work performed prior to EFI's assessment:

A. Ceiling tiles removed throughout identified areas.

Pre-existing conditions not related to loss:

B. Staining on ceiling tiles.

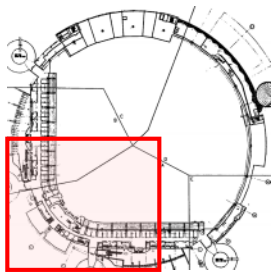

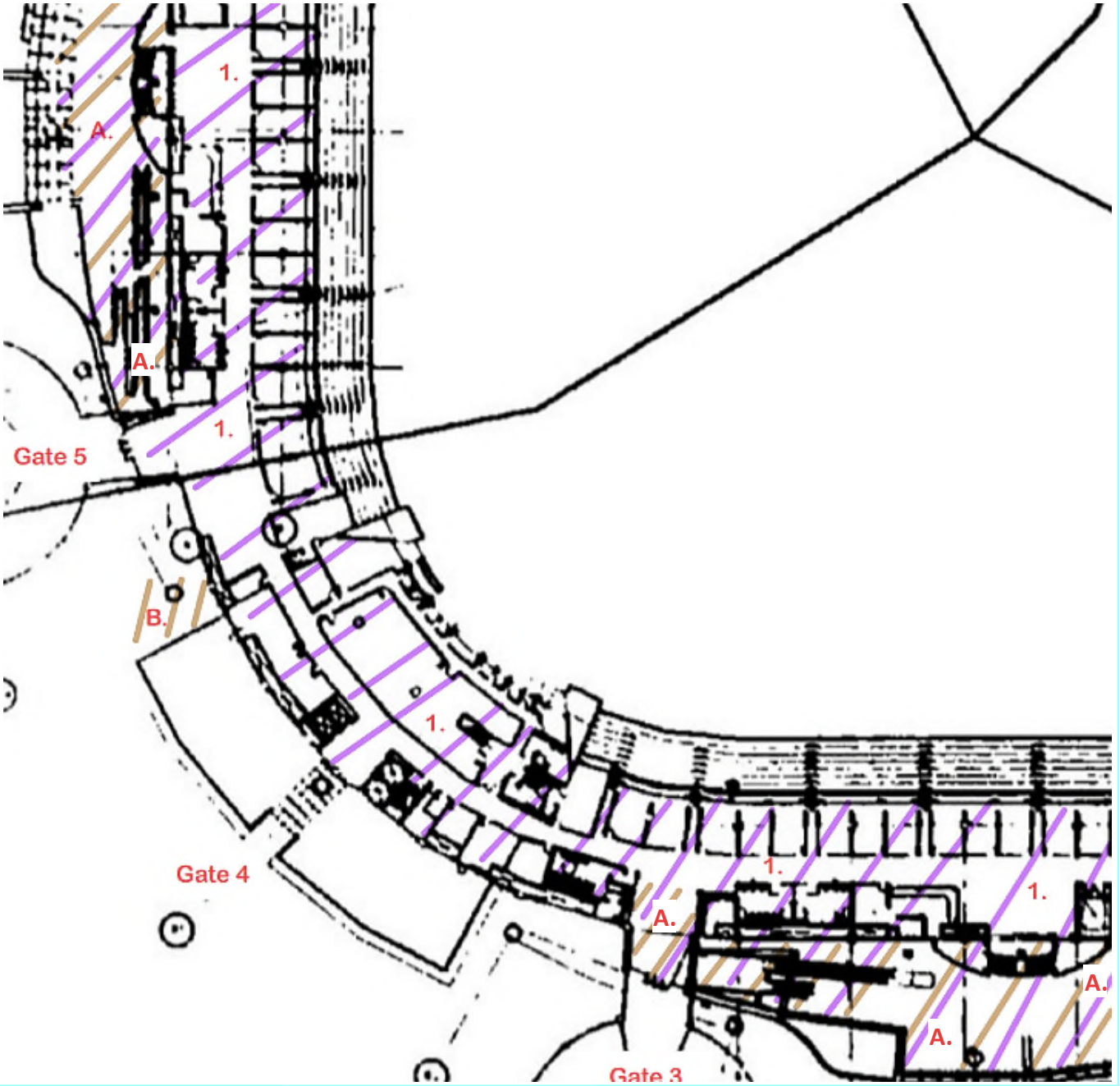

Damage Diagrams

Sedgwick Loss Adjusting
City of St. Petersburg – Tropicana Field
1 Tropicana Dr.
St. Petersburg, Florida
Claim No. / Client File No.: Market Loss

EFI File No.: 032.05366

Inspector(s): JC, HM, JA, KP, MP, TM

Inspection Date(s): October 21, 2024

efi global

Field Service Level

Damage Diagrams

Sedgwick Loss Adjusting
City of St. Petersburg – Tropicana Field
1 Tropicana Dr.
St. Petersburg, Florida
Claim No. / Client File No.: Market Loss

EFI File No.: 032.05366

Inspector(s): JC, HM, JA, KP, MP, TM

Inspection Date(s): October 21, 2024

efi global

Building Overview – Field Service Level

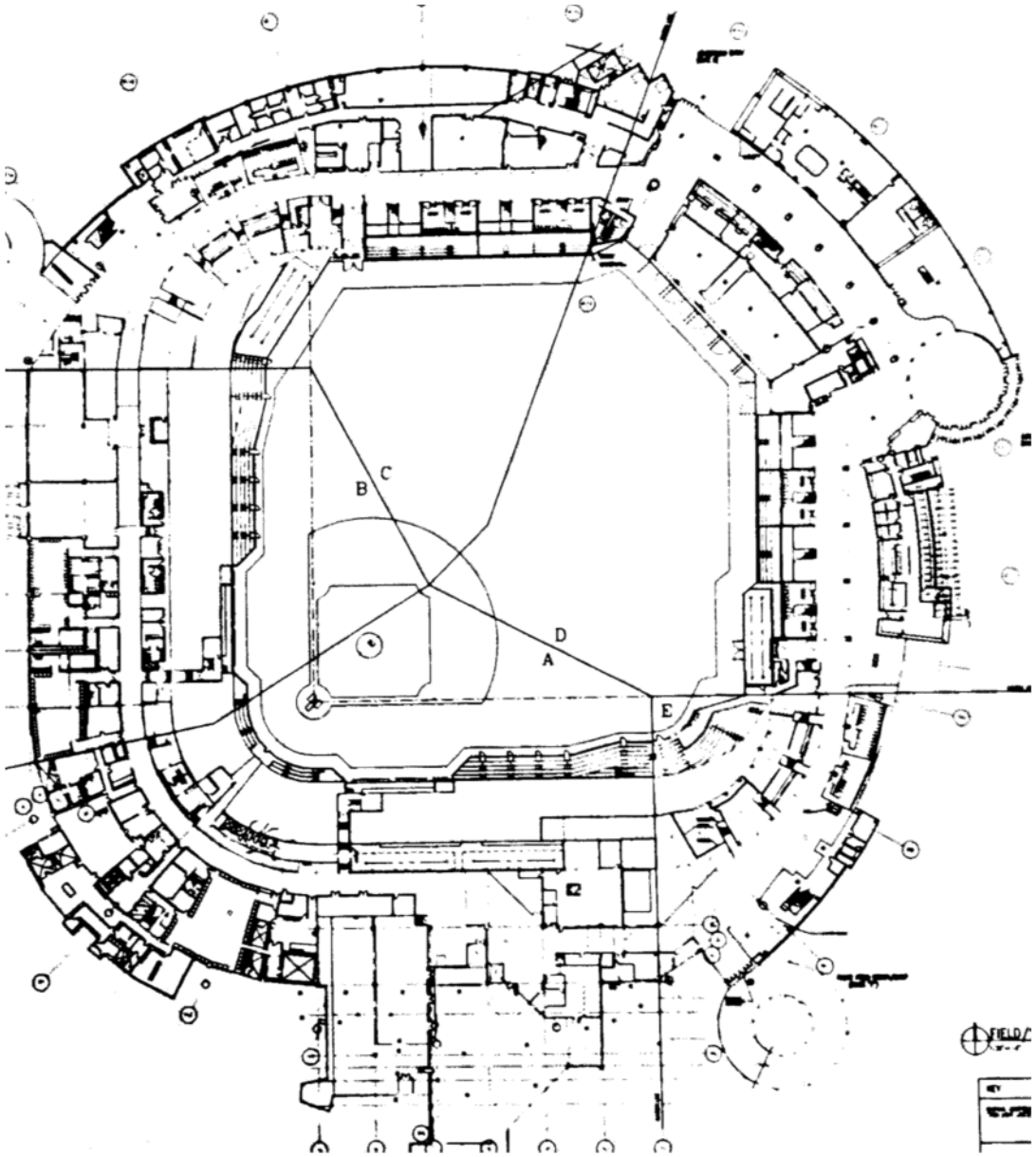

Damage Diagrams

Sedgwick Loss Adjusting
City of St. Petersburg – Tropicana Field
1 Tropicana Dr.
St. Petersburg, Florida
Claim No. / Client File No.: Market Loss

EFI File No.: 032.05366

Inspector(s): JC, HM, JA, KP, MP, TM

Inspection Date(s): October 21, 2024

efi global

Field Service Level – Northwest

1. CF5: Clean vinyl tile flooring throughout identified areas.
2. CF4: Clean carpet flooring throughout identified areas.
3. RF4: Remove carpet flooring as depicted.
4. CF8: Clean rubber flooring as depicted.
5. RC2: Remove 2’ by 2’ ceiling tiles, 12 total.
6. CX9: Clean light fixture.
7. CW7: Clean concrete wall from floor up to ceiling as depicted.



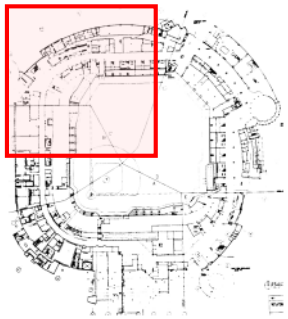

Damage Diagrams

Sedgwick Loss Adjusting
City of St. Petersburg – Tropicana Field
1 Tropicana Dr.
St. Petersburg, Florida
Claim No. / Client File No.: Market Loss

EFI File No.: 032.05366

Inspector(s): JC, HM, JA, KP, MP, TM

Inspection Date(s): October 21, 2024

efi global

Field Service Level – Southwest

1. RC2: Remove 2’ by 4’ ceiling tiles, 66 total.
2. CH8: Clean air registers (4 total).
3. CC1: Scrape, clean, and repair ceiling 1’ by 3’.
4. RC2/RC15: Remove 2’ by 4’ ceiling tiles and metal grid throughout identified area.
5. CF4: Clean carpet throughout.
6. RC2: Remove 2 by 2 ceiling tiles, 18 total.
7. CS1: Scrape, clean, and repair ceiling 1’ by 3’.
8. CF5: Clean and dry rubber flooring throughout with standing water.
9. CW7: Clean walls from floor up 2’ as depicted.
10. RX3: Remove bat storage box.
11. RF4: Remove carpet as depicted.
12. CF7: Clean concrete floor as depicted.
13. CC1: Scrape, clean, and repair ceiling 2’ by 2’.
14. CW1: Clean concrete wall as depicted.
15. RX3: Remove lower cabinet.
16. RW1/RB5: Remove wall from floor up 2’ throughout.
17. Establish containment for remediation.

Pre-existing conditions not related to loss:

A. Ceiling light fixture installation holes.

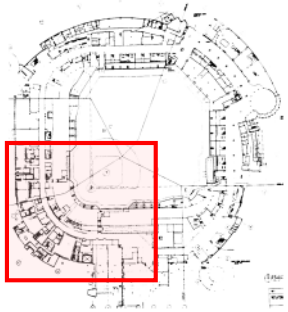

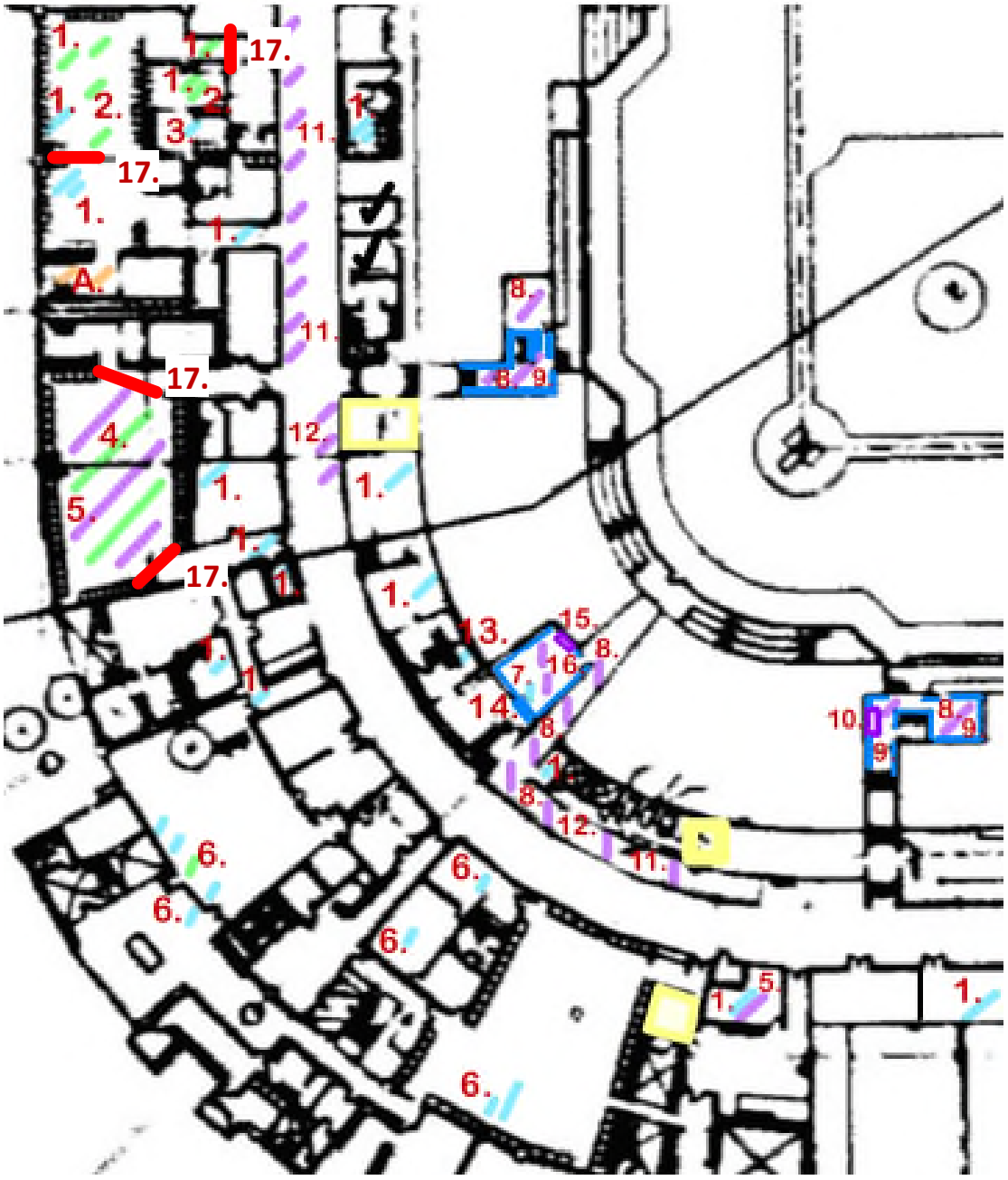

Damage Diagrams

Sedgwick Loss Adjusting
City of St. Petersburg – Tropicana Field
1 Tropicana Dr.
St. Petersburg, Florida
Claim No. / Client File No.: Market Loss

EFI File No.: 032.05366

Inspector(s): JC, HM, JA, KP, MP, TM

Inspection Date(s): October 21, 2024

efi global

Upper Mechanical Level

Damage Diagrams

Sedgwick Loss Adjusting
City of St. Petersburg – Tropicana Field
1 Tropicana Dr.
St. Petersburg, Florida
Claim No. / Client File No.: Market Loss

EFI File No.: 032.05366

Inspector(s): JC, HM, JA, KP, MP, TM

Inspection Date(s): October 21, 2024

efi global

Building Overview – Upper Mechanical Level

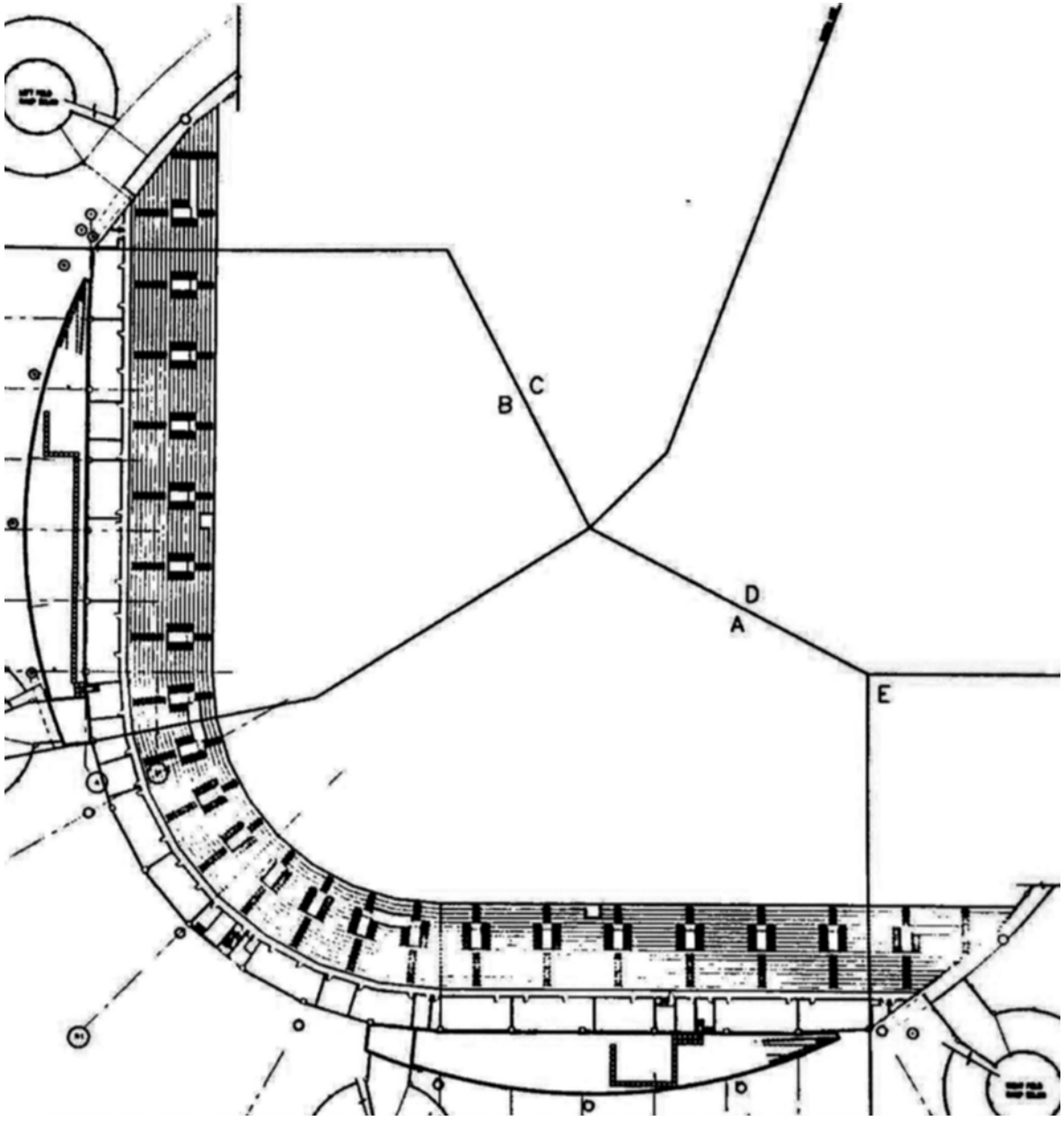

N

Damage Diagrams

Sedgwick Loss Adjusting
City of St. Petersburg – Tropicana Field
1 Tropicana Dr.
St. Petersburg, Florida
Claim No. / Client File No.: Market Loss

EFI File No.: 032.05366

Inspector(s): JC, HM, JA, KP, MP, TM

Inspection Date(s): October 21, 2024

efi global

Upper Mechanical Level – West

No visible damages were observed at the time of EFI's assessment on October 21, 2024.

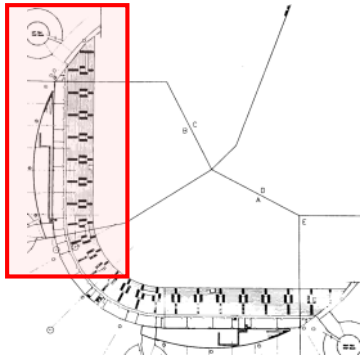

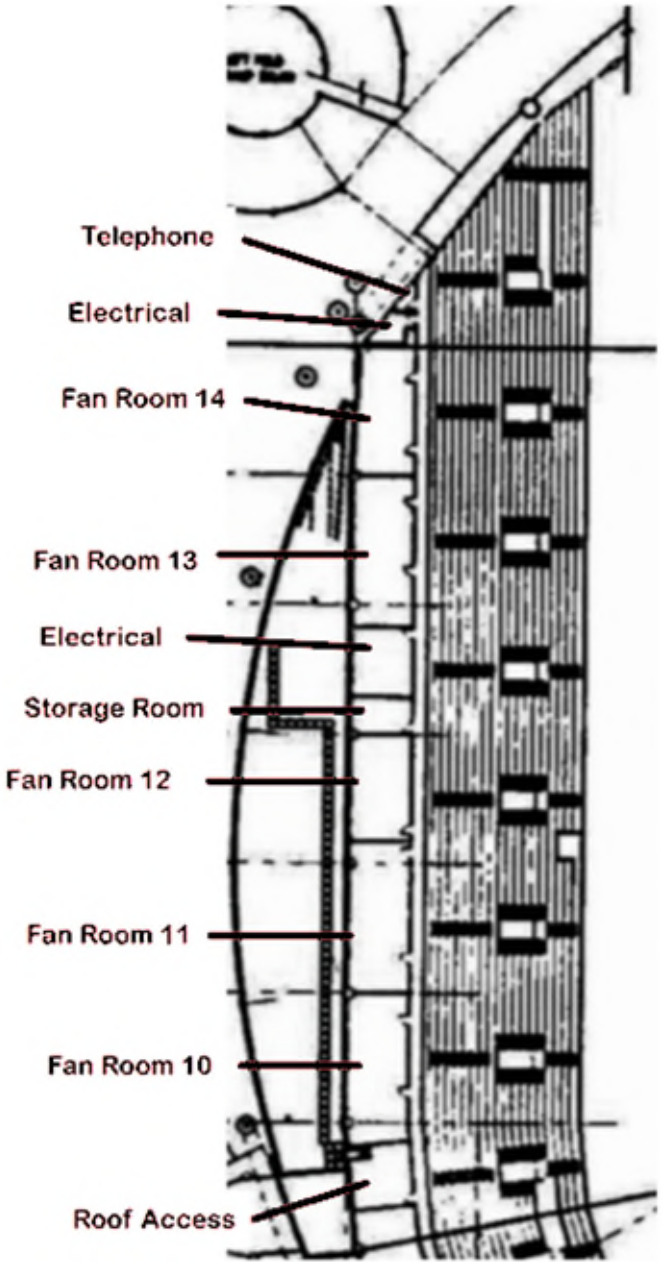

Damage Diagrams

Sedgwick Loss Adjusting
City of St. Petersburg – Tropicana Field
1 Tropicana Dr.
St. Petersburg, Florida
Claim No. / Client File No.: Market Loss

EFI File No.: 032.05366

Inspector(s): JC, HM, JA, KP, MP, TM

Inspection Date(s): October 21, 2024

efi global

Upper Mechanical Level – South

1. RC1: Remove ceiling 2’ by 4’.
2. RC1: Remove ceiling throughout identified areas as depicted ~300 square feet.
3. Establish containment during remediation.

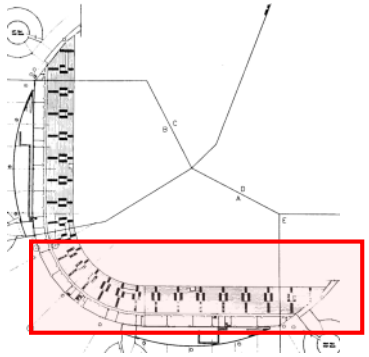

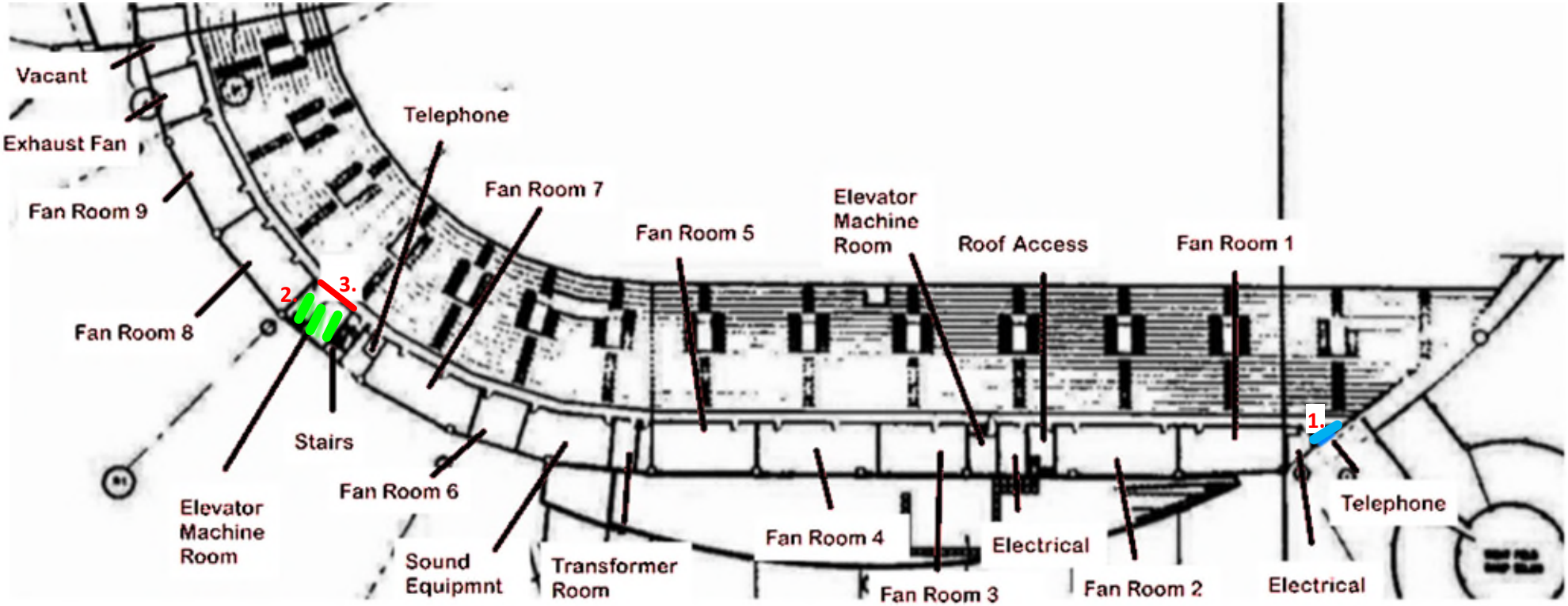

Damage Diagrams

Sedgwick Loss Adjusting
City of St. Petersburg – Tropicana Field
1 Tropicana Dr.
St. Petersburg, Florida
Claim No. / Client File No.: Market Loss

EFI File No.: 032.05366

Inspector(s): JC, HM, JA, KP, MP, TM

Inspection Date(s): October 21, 2024

efi global

Club Level

Damage Diagrams

Sedgwick Loss Adjusting
City of St. Petersburg – Tropicana Field
1 Tropicana Dr.
St. Petersburg, Florida
Claim No. / Client File No.: Market Loss

EFI File No.: 032.05366

Inspector(s): JC, HM, JA, KP, MP, TM

Inspection Date(s): October 21, 2024

efi global

Building Overview – Intermediate Concourse – Club Level

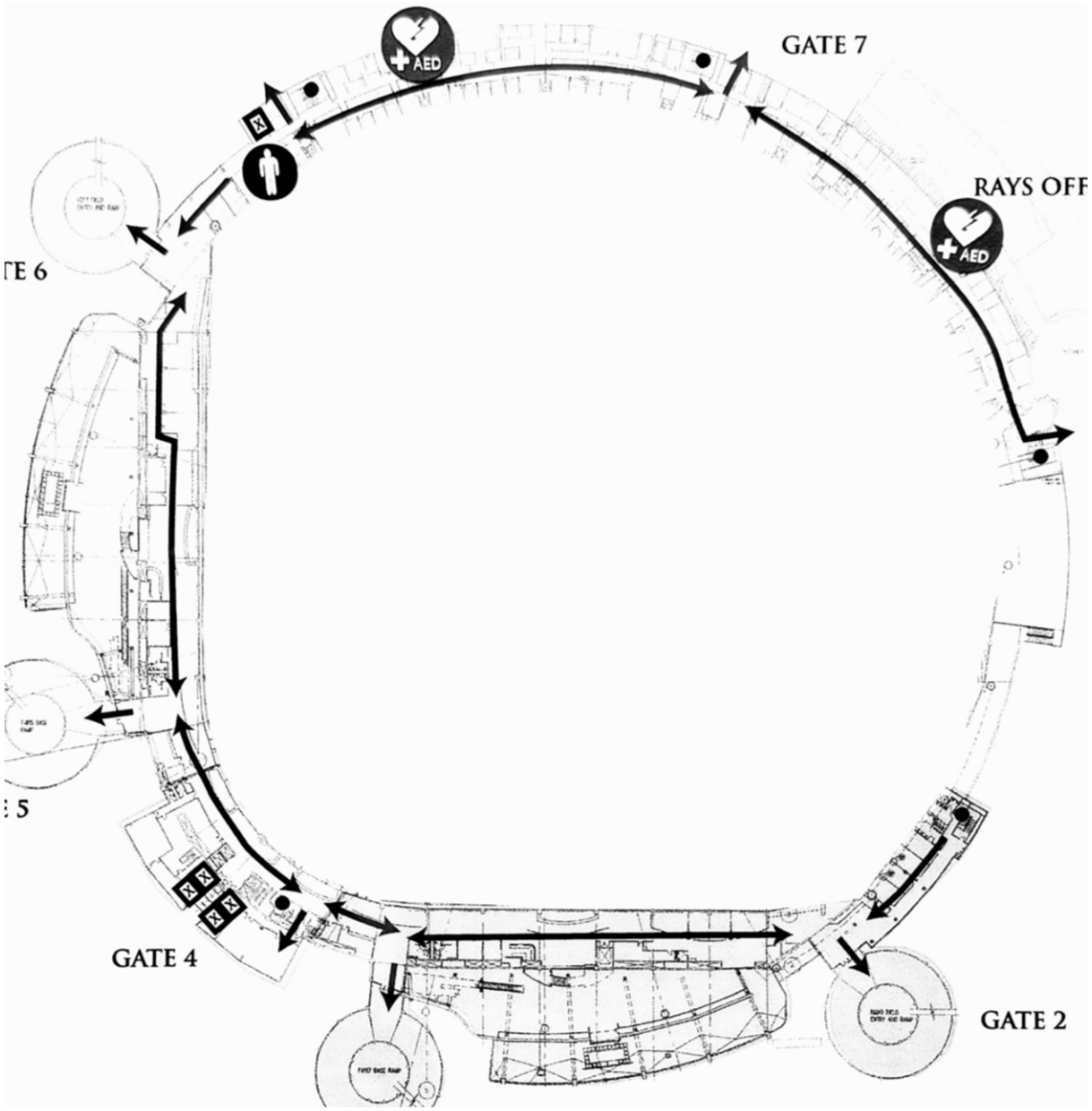

Damage Diagrams

Sedgwick Loss Adjusting
City of St. Petersburg – Tropicana Field
1 Tropicana Dr.
St. Petersburg, Florida
Claim No. / Client File No.: Market Loss

EFI File No.: 032.05366

Inspector(s): JC, HM, JA, KP, MP, TM

Inspection Date(s): October 21, 2024

efi global

Club Level – Northwest

1. RW1: Remove wall from floor up to beam by 10’.
2. RW1: Remove wall from floor up 2’ by 5’.
3. RW1: Remove wall from floor up to window by 2’
4. RC2: Remove 1 ceiling tile.
5. RW1: Remove wall from floor up to window as depicted.
6. CW1: Water damage observed on wall has dried, clean and refinish.
7. RW1: Remove wall from floor up 2’ by 45’.
8. RW1: Remove wall from floor up 2’ by 6’.
9. RW1: Remove wall from floor up 2’ throughout identified rooms as depicted.
10. RW1: Remove wall from floor up 2’ by 10’.
11. RW1: Remove wall from floor up 2’ by 8’.
12. RW1: Remove wall from floor up 2’ by 4’
13. RC2: Remove ceiling tiles in identified areas.
14. RS1: Remove soffit throughout identified areas and wall 4’ by 4’
15. RW1: Remove wall from floor up 2’ by 2’ (right of toilet)
16. RW1: Remove wall from floor up 2’ by 2’
17. CC1: Water damage observed on ceiling has dried, clean and refinish.
18. CW1: Water damage observed on wall has dried, clean and refinish.
19. RW1: Remove wall from floor up to ceiling by 8’.
20. RW1: Remove wall from floor up to ceiling on upper floor.
21. Establish containment for remediation.

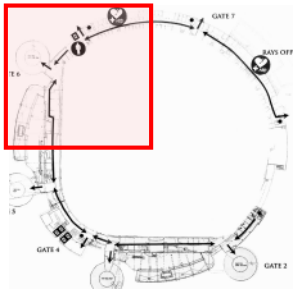

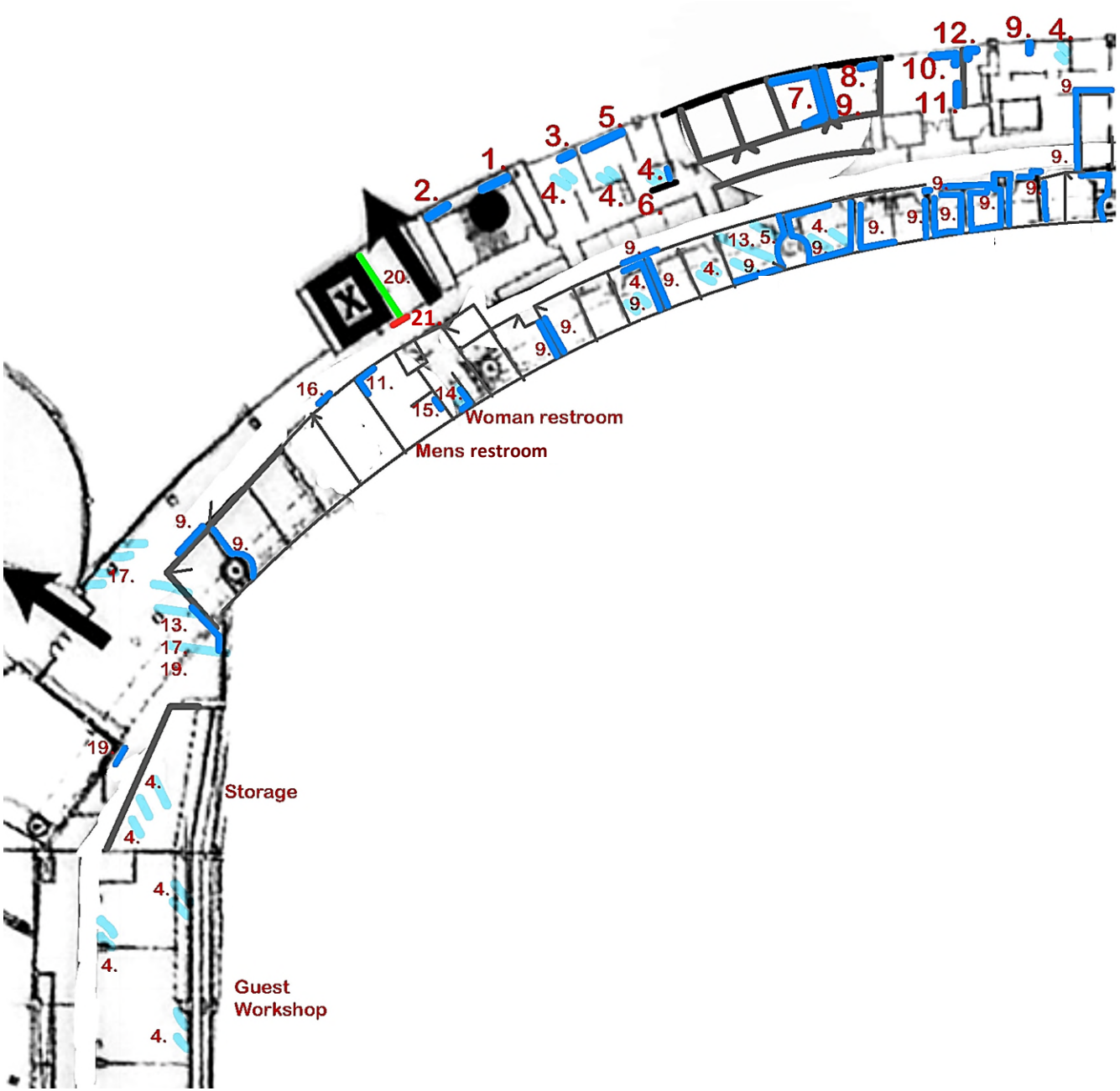

Damage Diagrams

Sedgwick Loss Adjusting
City of St. Petersburg – Tropicana Field
1 Tropicana Dr.
St. Petersburg, Florida
Claim No. / Client File No.: Market Loss

EFI File No.: 032.05366

Inspector(s): JC, HM, JA, KP, MP, TM

Inspection Date(s): October 21, 2024

efi global

Club Level – Northeast

1. RC2: Remove 1 ceiling tile.
2. RW1: Remove wall from floor up 2’ by 2’.
3. RW1: Remove wall from floor up 2’ as depicted.
4. RW1: Remove wall from floor up 2’ by 4’.
5. RW1: Remove wall from floor up 2’ by 8’.
6. RW1: Remove wall from floor up to window by 4’.
7. Depicted on East diagram.
8. RC2: Remove all ceiling tiles.
9. RW1: Remove wall from floor up to ceiling as depicted.
10. Depicted on East diagram.
11. Depicted on East diagram.
12. Depicted on East diagram.
13. RC2: Remove 7 ceiling tiles total.
14. RW1: Remove wall from floor up 4’ as depicted.
15. RC1: Remove ceiling 2’ by 2’.
16. RC1: Remove ceiling 10’ by 27’.
17. RC1: Remove ceiling 10’ by 30’.
18. RW1: Remove wall from floor up to ceiling by 10’.
19. RC1: Remove ceiling as depicted.
20. Establish containment during remediation.



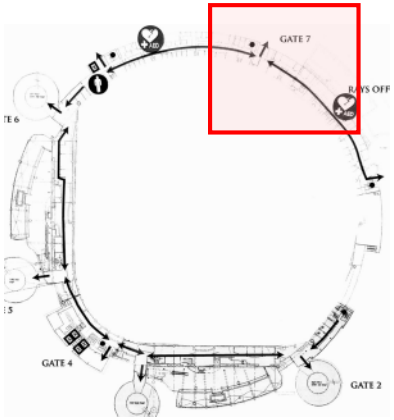

Damage Diagrams

Sedgwick Loss Adjusting
City of St. Petersburg – Tropicana Field
1 Tropicana Dr.
St. Petersburg, Florida
Claim No. / Client File No.: Market Loss

EFI File No.: 032.05366

Inspector(s): JC, HM, JA, KP, MP, TM

Inspection Date(s): October 21, 2024

efi global

Club Level – East

1. Depicted on Northeast diagram.
2. RW1: Remove wall from floor up 2’ by 2’.
3. RW1: Remove wall from floor up 2’ as depicted.
4. RW1: Remove wall from floor up 2’ by 4’.
5. Depicted on Northeast diagram.
6. Depicted on Northeast diagram.
7. RW1: Remove wall from floor up to window as depicted.
8. RC2: Remove all ceiling tiles.
9. RW1: Remove wall from floor up to ceiling as depicted.
10. RF4: Remove carpet as depicted.
11. RW1: Remove wall from floor up 2’ by 6’
12. RW1: Remove wall from floor up 2’ by 12.
13. RC2: Remove 7 ceiling tile total.



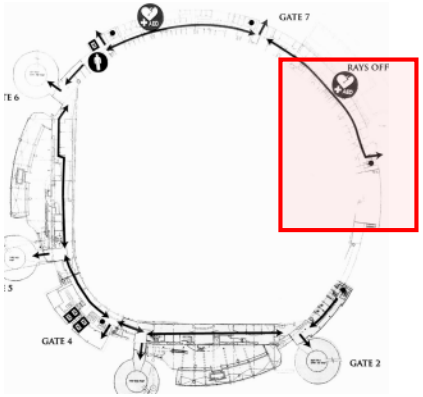

Damage Diagrams

Sedgwick Loss Adjusting
City of St. Petersburg – Tropicana Field
1 Tropicana Dr.
St. Petersburg, Florida
Claim No. / Client File No.: Market Loss

EFI File No.: 032.05366

Inspector(s): JC, HM, JA, KP, MP, TM

Inspection Date(s): October 21, 2024

efi global

Club Level – Southeast

1. RC1: Remove ceiling 10’ by 10’ (bar ceiling).
2. RC2: Remove 8 ceiling tiles total.
3. RC2: Remove all ceiling tiles (soffit ceiling throughout identified areas dried in place).
4. RC2: Remove 2 ceiling tiles.
5. RC2: Remove 1 ceiling tile.
6. RS1: Remove soffit throughout identified areas 2’ by 4’.
7. RS1: Remove soffit throughout identified areas 2’ by 8’
8. RC2: Remove 10 ceiling tiles.

Pre-existing conditions not related to loss:

A. Visible suspect mold growth observed on wall next to janitor sink.

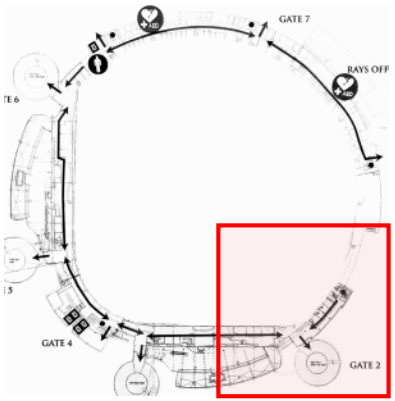

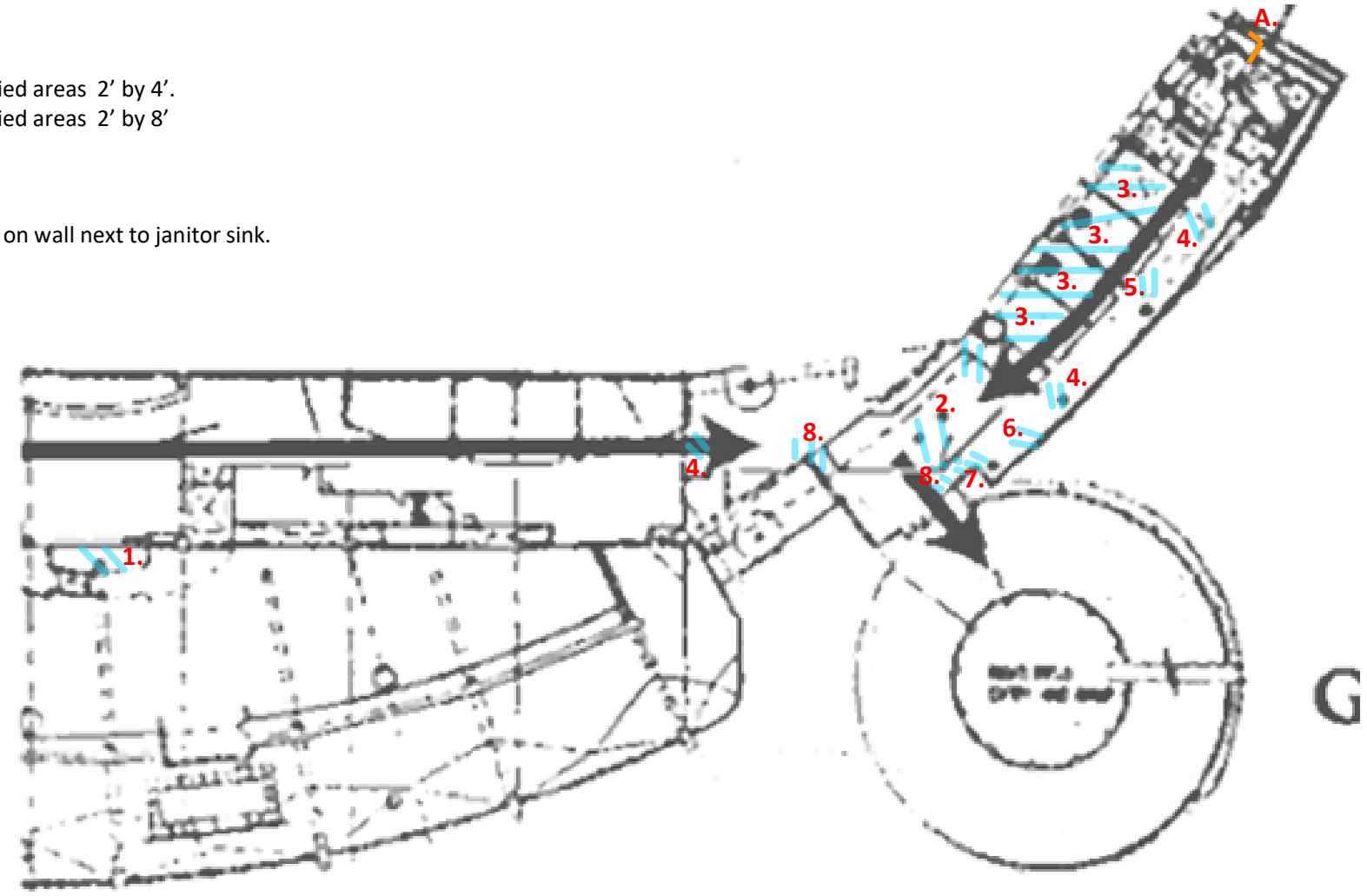

Damage Diagrams

Sedgwick Loss Adjusting
City of St. Petersburg – Tropicana Field
1 Tropicana Dr.
St. Petersburg, Florida
Claim No. / Client File No.: Market Loss

EFI File No.: 032.05366

Inspector(s): JC, HM, JA, KP, MP, TM

Inspection Date(s): October 21, 2024

efi global

Club Level – Southwest

1. RC2: Remove 20 ceiling tiles.
2. RC2: Remove 2 ceiling tiles.

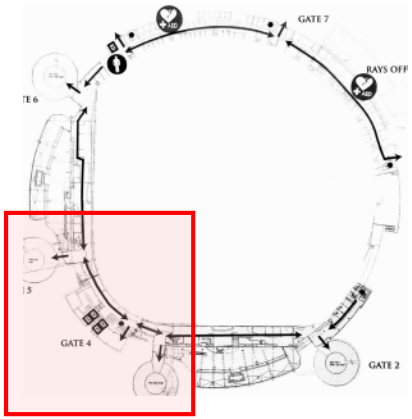

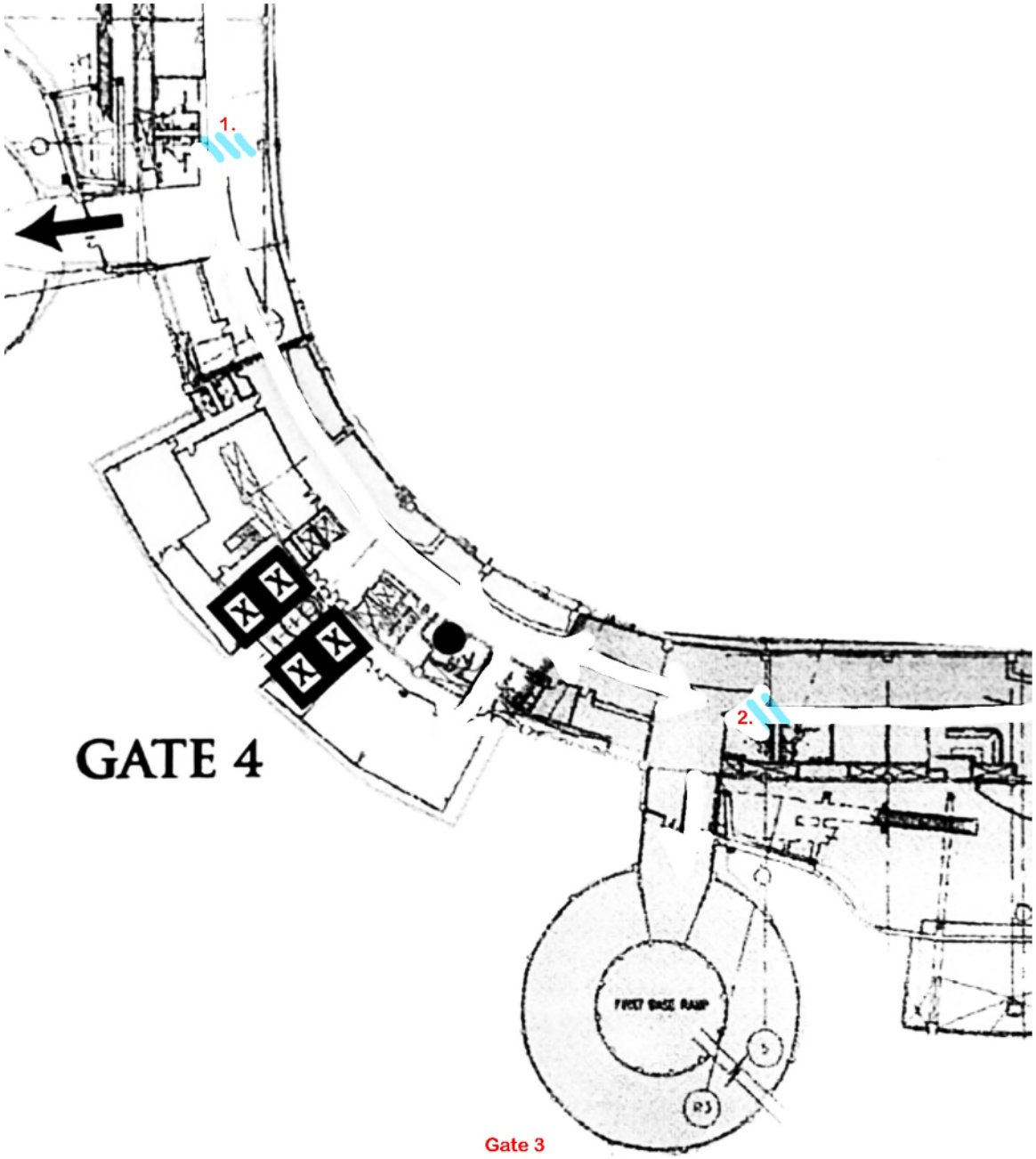

Damage Diagrams

Sedgwick Loss Adjusting
City of St. Petersburg – Tropicana Field
1 Tropicana Dr.
St. Petersburg, Florida
Claim No. / Client File No.: Market Loss

EFI File No.: 032.05366

Inspector(s): JC, HM, JA, KP, MP, TM

Inspection Date(s): October 21, 2024

efi global

F

Conclusions and Findings Summary

HENNESSY CONSTRUCTION SERVICES

AECOM HUNT

F. Conclusions and Findings

The assessment provided by Hennessy and AECOM Hunt provides an opinion on the current status of Tropicana Field from the time period of October 21 until November 8, 2024. Conditions of the facility are not known beyond this timeframe and are not included in this report.

Overall, the stadium appears structurally sound and would be a viable candidate to continue to serve the City (should they so decide) in providing continued service following hurricane damage repairs. Geiger Engineering has confirmed the structural integrity of the building and roof support structure remains intact. Building Mechanical systems appear to be minimally affected (HVAC, Fire Protection, Plumbing) and in general would need modification in connection to repairs and replacement of interior finishes as outlined in the Assessment and as further clarified in the Preliminary Cost Estimate (section G). The main electrical system appears intact with portions of the roof catwalk system and field level in question. For this report, a full visual inspection of these systems was performed, however more specific component testing will be required during any refurbishment and commissioning of the facility.

Finishes in general remain intact throughout the club, suite, concession and service levels. The administrative areas that house the baseball team are affected by wind and water damage. The extent of the impact in recorded in section E of the Assessment. It is recommended that the City of St. Petersburg consider discontinuing the supply of cool air in the finished area of the facility, which could cause sweating on finish surfaces caused by condensation on finished surfaces throughout. Moisture mitigation should be employed to control rain and unconditioned air in finished areas. Fans, desiccant units, and spot coolers are advised as needed throughout finished spaces to prevent further exposure to high humidity conditions and to attempt to mitigate the affect of biological growth on finished surfaces. With the Roof fabric installation many months away if repairs are authorized, a robust system of temporary building temperature control and continued installation of temporary protection is advised.

Vertical transportation was available throughout the facility and operational during the time on the Assessment.

The exterior of the facility was mostly intact with the main damage observed with the fabric roof and portions of the exterior metal panel system. Storefront doors, exterior glazing systems and the CMU skin at the lower levels were observed to be intact and functional.

Audio and visual systems are affected throughout the facility. These systems will need to be powered on and fully tested for performance levels and identification of possible component replacement.

Detailed information concerning a preliminary Estimate of Repair Cost follows in section G as well as a Preliminary Schedule to perform the facility repair is included in section H.

G

Preliminary Repair Cost Estimate

HENNESSY CONSTRUCTION SERVICES

AECOM HUNT

Preliminary Cost Estimate
Assumptions and Clarifications
Tropicana Field Roof Restoration and Interior Repairs
St. Petersburg, FL

GENERAL

1. The preliminary cost estimate is based on AECOM Hunt's and Hennessy Construction's visual field assessments of existing conditions between October 21st, 2024 and November 8th, 2024 along with supporting reports provided to us from vendors.
2. There was no operational testing of any equipment including video boards, graphic boards, electrical equipment, mechanical, fire protection, plumbing, HVAC, security, low voltage etc. All inspections were visual.
3. Documents used to prepare the preliminary cost estimate were created from the following:
    - Scanned copies of the September 10, 1987, Roof Outer Fabric Membrane and See AsseUpper Cable Plan (23 pgs.)
    - Scanned in copies of the Architectural, MEP and Structural plans dated November 25, 1996
    - Specification section 13 31 23 Tensioned Membrane Fabric "Issued for Pricing 20 October 2024".
    - Geiger Engineer's "Tropicana Field Roof Structure Conditions Assessment" dated October 29, 2024.
    - Geiger Engineer's "2024.11.04 Study – Tropicana Fabric Installation Study"
    - EFI Global's "Water Damage and Mold Remediation Protocol" report dated October 22, 2024.
    - Electrical System Checklist Report from the AECOM/APG Electrical System Damage Checklist recorded during the Tropicana Field Hurricane Damage Assessment dated Nov 4, 2024.
    - Prime Air Conditioning & Refrigeration, Inc. assessment dated 10-22-24 to 10-24-24.
    - Weaver Fire Protection Services, Inc. assessment letter dated 10-30-24
4. It is assumed that all existing conditions for accessibility per local, state, and federal requirements are compliant. Assessment assumes that existing conditions comply with local, state, or federal requirements regarding ADA compliance.
5. The preliminary cost estimate includes sales tax.
6. Subcontractor Payment and Performance Bonds are included.
7. The preliminary cost estimate is based on working hours from 7:00 AM – 3:30 PM No off hours or overtime hours are included.

8. The following items are Owner Provided:
    - Access to existing elevators for construction use
    - Use of the existing parking for trades people and material and equipment staging.
    - Costs associated with utilities and utility consumption such as power, natural gas, cooling etc.

9. The following items are excluded:
    - Environmental Product Declarations (EPD) Reporting
    - Utility Consumption Charges
    - Special Warranties
    - XBE and workforce requirements
    - LEED Certification and associated requirements
    - Performance and visual Mock-Ups
    - Cleaning and sanitiation of food service equipment
10. We have assumed uninhibited access to the facility for the full duration of the work.
11. The preliminary cost estimate excludes the following owner related project soft costs such as:
    - Financing
    - Commissioning Agent Services
    - Moving Expenses
    - Advertising Expenses
12. Work for trade scopes not noted below is not included preliminary cost estimate.

Trade Scope 01 Temporary Protection

1. Costs for temporary protection and waterproofing is not included in the preliminary cost estimate.

Trade Scope 02 Demolition

1. We have not included removal of the existing fabric roof membrane or the cots for the emergency workers. (this is noted in the estimate 02410.040)
2. Interior demolition and remediation is not included and assumed to be completed by others.

Trade Scope 07 Metal Wall Panels

1. The estimate includes costs to re-engage metal panels which have been blown loose on the interior and exterior of the building. Panels which are damaged or impossible to re-engage shall be replaced.

Trade Scope 09 Architectural Finishes

1. Demolition and removals of damaged interior finishes is by others and not included. This includes but not limited to architectural wall details (trim, baseboard), wall coverings, doors and hardware, casework and counter tops.
2. Detailed area quantities shown in the estimate are generated from diagrams shown in the EFI Global Assessment document.
3. An allowance has been included for removal (and replacement where required) of existing fixed spectator seating to facilitate installation of new replacement metal panels.
4. Quantities and costs should be considered allowances until a more in-depth assessment can be made.
5. Excessive moisture was present in the club suites and office area's. Interior finishes may be compromised due to moisture.

Trade Scope 13 Tension Fabric Roof

1. Removal of the damaged roof fabric and acoustic lining is by others.
2. The preliminary cost estimate is based on providing a new PTFE white tension fabric roof membrane.
3. The preliminary cost estimate includes 100% of the valley cables comprised of 7-wire stand bundles and their end anchors will require replacement, 100% of all ponding cables and their end-fittings will require replacement, and 100% of the ponding connections to the perimeter ring beam will require replacement.
4. Assume 75% of existing "hardware" is reusable.
5. We include a 3 year workmanship warranty and a 5 year material warranty.
6. A new acoustic / sound lining is not included.
7. Structural roof components were deemed structurally acceptable. Estimate excludes any structural modifications.

Trade Scope 21 Fire Protection

1. Assumes reuse of existing fire and jockey pump and controllers including sprinkler mains and all branch lines.
2. Allowance carried for removal and replacement of existing sprinkler mains, branch lines, and sprinkler heads where architectural remediation is required.
3. Allowance carried for replacement of several corroded/leaking sprinkler heads throughout.

Trade Scope 22 Plumbing

1. Assumes reuse of all existing major equipment and plumbing pipes.
2. Allowance carried for removal and reinstallation of existing plumbing fixtures where architectural remediation is required.

Trade Scope 23 HVAC

1. Assumes reuse of all existing major equipment including metal ductwork.
2. Assumes reuse of all existing BAS control systems.
3. Allowance carried for removal and replacement of existing supply/exhaust diffusers where architectural remediation is required.

4. Allowance carried for replacement of some non-metal ductwork (i.e. flex duct) and HVAC insulation.
5. Allowance carried for filter replacement on all main HVAC air distribution equipment.

Trade Scope 26 Electrical

Electrical Systems were visually inspected for damage, but systems located on the catwalk system of the roof structure, playing field, and that were exposed to water infiltration may need further inspection to verify electrical cabling integrity as a part of the recommissioning of the overall electrical system including those systems that are known to be NEMA 3 rated systems.

1. The estimate includes allowances for electrical systems exposed to water as specifically outlined in the descriptions of each line item.
2. The estimate does not include making all components of all electrical systems (affected or not by the hurricane) compliant with current electrical code.
3. The estimate includes the following amount for re-work to existing system components as follows:

    a. Electrical Grid (all risers) – QC assurance and reliability -$100k with a contingency of $500k for material and labor as needed
    b. Catwalk electrical test and recondition as needed if new code is not applicable- $250K
    c. Press area electrical – replace all electrical outlets and lights as needed following a pre-test of the system.
    d. Catwalk show lights replacement if necessary (not an MLB requirement) $300K
    e. Catwalk sports lighting test and reaming I, including replacing pole damaged lights $300K
    f. Catwalk electrical outlets and other miscellaneous electrical hardware $200K
    Catwalk - test all network cabling $50K with retention for possible parts replacement $100K
    g. Catwalk test Broadcast system $50K with retention for
    Parts replacement $100K
    h. Audio (Array) test and possibly precondition $200K- replace damaged array $100K
    i. Replace all array speakers $500K
    j. Press area audio speakers test and replace as needed $100K

Trade Scope 27 Audio Visual

1. Only visual inspection was included in the Assessment, Power On and Performance Testing is not included for the Main Display Boards, Production, Video Equipment and supporting electrical infrastructure.

Trade Scope 32 Athletic Surfacing

1. The estimate assumes removal of the existing playing field surface and is included in the estimate.
2. The estimate includes furnishing and installing a new playing field (grass areas of the field).
3. An allowance is included for replacement of the clay infield.

HENNESSY CONSTRUCTION SERVICES

AECOM HUNT

Tropicana Field - Hurricane Milton Damage Assessment

St. Petersburg, FL

Preliminary Cost Estimate		TOTALS	Work Authorized to Date	Remaining Protections and Removals Required	Ballpark	Fabric Membrane Roof	Content Damage
November 11th, 2024							*See Note
ESTIMATE DETAIL TOTAL		**$39,087,150**	**$6,666,355**	**$3,826,597**	**$8,600,198**	**$15,414,000**	**$4,580,000**
Sub Bonds	1.25%	$357,427	$0	$0	$107,502	$192,675	$57,250
Contingency	10.00%	$2,859,420	$0	$0	$860,020	$1,541,400	$458,000
DIRECT COST TOTAL		**$42,303,997**	**$6,666,355**	**$3,826,597**	**$9,567,720**	**$17,148,075**	**$5,095,250**
CM Staff and General Conditions	LS	$2,703,939	$0	$0	$813,256	$1,457,586	$433,096
Building Permit - By owner	1.00%	$318,110	$0	$0	$95,677	$171,481	$50,953
Testing and Inspection - By owner							
Total Construction Services		**$3,022,049**	**$0**	**$0**	**$908,933**	**$1,629,067**	**$484,049**
General Liability Insurance	1.00%	$383,886	$0	$0	$115,460	$206,938	$61,488
Builder's Risk Insurance	2.50%	$959,715	$0	$0	$288,651	$517,345	$153,720
CM Payment / Performance Bond	1.00%	$383,886	$0	$0	$115,460	$206,938	$61,488
Total Insurance, Taxes & Bond		**$1,727,488**	**$0**	**$0**	**$519,572**	**$931,220**	**$276,696**
CM Fee	5.00%	$1,828,029	$0	$0	$549,811	$985,418	$292,800
Total Fees		**$1,828,029**	**$0**	**$0**	**$549,811**	**$985,418**	**$292,800**
Preliminary Construction Cost TOTAL		**$48,881,563**	**$6,666,355**	**$3,826,597**	**$11,546,037**	**$20,693,780**	**$6,148,794**
Owner Contingency	5.00%	$2,444,078	$0	$0	$577,302	$1,034,689	$307,440
Design Fees and Reimbursables	5.00%	$2,444,078	$0	$0	$577,302	$1,034,689	$307,440
Testing, Inspection, Consultants.	4.00%	$1,955,263	$0	$0	$461,841	$827,751	$245,952
Total Fees		**$6,843,419**	**$0**	**$0**	**$1,616,445**	**$2,897,129**	**$860,831**
TOTAL		**$55,724,982**	**$6,666,355**	**$3,826,597**	**$13,162,482**	**$23,590,910**	**$7,009,625**

*Content damage values and responsibility to be determined by Tampa Bay Rays and the City of St. Petersburg.

Tropicana Field - Hurricane Milton Damage Assessment

St. Petersburg, FL

Project Size: 1 GSF 1 Units

Estimate # 01 , Rev 1
Estimate Date: 11/11/2024
Print Date: 11/11/2024

Description	Total $	$ / GSF	$ / Units	% of Est
A0 Work Authorized to Date	6,666,355	6,666,355.00	6,666,355.00	17.06
003000 Available information	250,000	250,000.00	250,000.00	0.64
015300 Temporary construction	6,000,000	6,000,000.00	6,000,000.00	15.35
024200 Removal and salvage	416,355	416,355.00	416,355.00	1.07
A1 Remaining Protections and Removals Required	3,826,597	3,826,597.00	3,826,597.00	9.79
015300 Temporary construction	3,704,750	3,704,750.00	3,704,750.00	9.48
024200 Removal and salvage	121,847	121,847.00	121,847.00	0.31
B0 Ballpark	8,600,198	8,600,198.00	8,600,198.00	22.00
010000 General requirements	500,000	500,000.00	500,000.00	1.28
074213 Metal panels	1,375,000	1,375,000.00	1,375,000.00	3.52
075000 Membrane roofing	225,000	225,000.00	225,000.00	0.58
090000 Finishes	225,000	225,000.00	225,000.00	0.58
091101 Plaster and gypsum board	149,805	149,805.00	149,805.00	0.38
095000 Ceilings	1,417,548	1,417,548.00	1,417,548.00	3.63
096000 Flooring	1,407,845	1,407,845.00	1,407,845.00	3.60
211313 Wet pipe sprinklers	50,000	50,000.00	50,000.00	0.13
224213 Commercial water closets, urinals and bidets	100,000	100,000.00	100,000.00	0.26

Tropicana Field - Hurricane Milton Damage Assessment

St. Petersburg, FL

Project Size: 1 GSF 1 Units

Estimate # 01 , Rev 1
Estimate Date: 11/11/2024
Print Date: 11/11/2024

Description	Total $	$ / GSF	$ / Units	% of Est
B0 Ballpark	8,600,198	8,600,198.00	8,600,198.00	22.00
230500 Common HVAC work results	350,000	350,000.00	350,000.00	0.90
260000 Electrical	2,100,000	2,100,000.00	2,100,000.00	5.37
271000 Structured cable	600,000	600,000.00	600,000.00	1.54
283100 Fire alarm systems	100,000	100,000.00	100,000.00	0.26
C0 Fabric Membrane Roof	15,414,000	15,414,000.00	15,414,000.00	39.43
010000 General requirements	500,000	500,000.00	500,000.00	1.28
051200 Structural steel framing	1,000,000	1,000,000.00	1,000,000.00	2.56
133100 Fabric structures	13,814,000	13,814,000.00	13,814,000.00	35.34
260000 Electrical	100,000	100,000.00	100,000.00	0.26
E0 Content Damage	4,580,000	4,580,000.00	4,580,000.00	11.72
010000 General requirements	100,000	100,000.00	100,000.00	0.26
115200 Audio visual equipment	3,200,000	3,200,000.00	3,200,000.00	8.19
321800 Athletic surfaces	1,280,000	1,280,000.00	1,280,000.00	3.27
ESTIMATE DETAIL TOTAL	$39,087,150	39,087,150	39,087,150	100.00

Tropicana Field - Hurricane Milton Damage Assessment

St. Petersburg, FL

Project Size: 1 GSF 1 Units

Estimate #01 , Rev #1
Estimate Date: 11/11/2024
Print Date: 11/11/2024

Item	Description	Quantity	Unit $	Total $
	A0 Work Authorized to Date			
	003000 Available information			
00300.000	Three Week Assessment Report	1 LS	250,000	250,000
	Total 003000 Available information			**250,000**
	015300 Temporary construction			
01530.010	Hennesey Protection 10.29.24 Scope	1 LS	2,500,000	2,500,000
01530.110	BSM Cat	1 LS	3,500,000	3,500,000
	Total 015300 Temporary construction			**6,000,000**
	024200 Removal and salvage			
02410.020	GRA: Remove Remaining Intact Roof Panels	1 LS	416,355	416,355
02410.040	Remove Cots from Field (Completed by Others)			
02410.040	Remove Damaged Fabric Panels (Completed by Others)			
	Total 024200 Removal and salvage			**416,355**
	Total A0 Work Authorized to Date			**6,666,355**
	A1 Remaining Protections and Removals Required			
	015300 Temporary construction			
01530.010	GRA/HORUS: Protection at Perf Panels	1 LS	1,877,750	1,877,750
01530.020	Remove Temporary Protection throughout the Building	1 LS	1,827,000	1,827,000
	Total 015300 Temporary construction			**3,704,750**
	024200 Removal and salvage			
02410.020	Remove Sheetmetal Cladding at Roof	1 LS	121,847	121,847
	Total 024200 Removal and salvage			**121,847**
	Total A1 Remaining Protections and Removals Required			**3,826,597**
	B0 Ballpark			

Tropicana Field - Hurricane Milton Damage Assessment

St. Petersburg, FL

Project Size: 1 GSF 1 Units

Estimate #01 , Rev #1
Estimate Date: 11/11/2024
Print Date: 11/11/2024

Item	Description	Quantity		Unit $	Total $
	B0 Ballpark				
	010000 General requirements				
01000.000	General Requirements - Ballpark	1	LS	500,000	500,000
	Total 010000 General requirements				**500,000**
	074213 Metal panels				
07421.000	Replace and Patch Exterior Metal Siding	1	LS	432,000	432,000
07421.000	Replace and Patch Interior Metal Siding	1	LS	943,000	943,000
	Total 074213 Metal panels				**1,375,000**
	075000 Membrane roofing				
07500.100	Repair and Replace Flat Roofs	1	LS	225,000	225,000
	Total 075000 Membrane roofing				**225,000**
	090000 Finishes				
09000.000	Remove and Reinstall Seats in Impacted Areas	1	EA	75,000	75,000
09000.000	Replace Misc Architural Damage	1	EA	150,000	150,000
	Total 090000 Finishes				**225,000**
	091101 Plaster and gypsum board				
09110.000	Replace Drywall on Existing Metal Stud Wall, Paint, Restore Finishes - CLUB LEVEL EAST	2,560	SQFT	7.50	19,200
09110.000	Replace Drywall on Existing Metal Stud Wall, Paint, Restore Finishes - CLUB LEVEL NORTHEAST	3,485	SQFT	7.50	26,138
09110.000	Replace Drywall on Existing Metal Stud Wall, Paint, Restore Finishes - CLUB LEVEL NORTHWEST	8,918	SQFT	7.50	66,885
09110.000	Replace Drywall on Existing Metal Stud Wall, Paint, Restore Finishes - CLUB LEVEL SOUTHEAST	231	SQFT	7.50	1,733
09110.000	Replace Drywall on Existing Metal Stud Wall, Paint, Restore Finishes - SERVICE LEVEL SOUTHWEST	3,711	SQFT	7.50	27,833
09110.000	Replace Drywall on Existing Metal Stud Wall, Paint, Restore Finishes - UPPER MECHANICAL SOUTH	1,069	SQFT	7.50	8,018
	Total 091101 Plaster and gypsum board				**149,805**
	095000 Ceilings				
09500.000	Replace Ceilings - 200 LEVEL NORTHEAST	4,263	SQFT	12.00	51,156
09500.000	Replace Ceilings - 300 LEVEL NORTHEAST	28,849	SQFT	12.00	346,188

Tropicana Field - Hurricane Milton Damage Assessment

St. Petersburg, FL

Project Size: 1 GSF 1 Units

Estimate #01 , Rev #1
Estimate Date: 11/11/2024
Print Date: 11/11/2024

Item	Description	Quantity		Unit $	Total $
	B0 Ballpark				
	095000 Ceilings				
09500.000	Replace Ceilings - 300 LEVEL NORTHWEST	27,936	SQFT	12.00	335,232
09500.000	Replace Ceilings - 300 LEVEL SOUTHEAST	2,181	SQFT	12.00	26,172
09500.000	Replace Ceilings - 300 LEVEL SOUTHWEST	20,023	SQFT	12.00	240,276
09500.000	Replace Ceilings - CLUB LEVEL EAST	5,176	SQFT	12.00	62,112
09500.000	Replace Ceilings - CLUB LEVEL NORTHEAST	4,574	SQFT	12.00	54,888
09500.000	Replace Ceilings - CLUB LEVEL NORTHWEST	7,054	SQFT	12.00	84,648
09500.000	Replace Ceilings - CLUB LEVEL SOUTHEAST	4,260	SQFT	12.00	51,120
09500.000	Replace Ceilings - CLUB LEVEL SOUTHWEST	1,550	SQFT	12.00	18,600
09500.000	Replace Ceilings - SERVICE LEVEL NORTHWEST	1,876	SQFT	12.00	22,512
09500.000	Replace Ceilings - SERVICE LEVEL SOUTHWEST	9,928	SQFT	12.00	119,136
09500.000	Replace Ceilings - UPPER MECHANICAL SOUTH	459	SQFT	12.00	5,508
	Total 095000 Ceilings				**1,417,548**
	096000 Flooring				
09600.000	Replace Flooring (or Clean Where Possible) - 200 LEVEL NORTHEAST	1,687	SQFT	5.00	8,435
09600.000	Replace Flooring (or Clean Where Possible) - 300 LEVEL NORTHEAST	25,134	SQFT	5.00	125,670
09600.000	Replace Flooring (or Clean Where Possible) - 300 LEVEL NORTHWEST	34,989	SQFT	5.00	174,945
09600.000	Replace Flooring (or Clean Where Possible) - 300 LEVEL SOUTHEAST	13,344	SQFT	5.00	66,720
09600.000	Replace Flooring (or Clean Where Possible) - 300 LEVEL SOUTHWEST	49,584	SQFT	5.00	247,920
09600.000	Replace Flooring (or Clean Where Possible) - CLUB LEVEL EAST	290	SQFT	5.00	1,450
09600.000	Replace Flooring (or Clean Where Possible) - CLUB LEVEL NORTHEAST	4,574	SQFT	5.00	22,870
09600.000	Replace Flooring (or Clean Where Possible) - CLUB LEVEL NORTHWEST	7,054	SQFT	5.00	35,270
09600.000	Replace Flooring (or Clean Where Possible) - CLUB LEVEL SOUTHEAST	4,260	SQFT	5.00	21,300
09600.000	Replace Flooring (or Clean Where Possible) - CLUB LEVEL SOUTHWEST	1,550	SQFT	5.00	7,750
09600.000	Replace Flooring (or Clean Where Possible) - SERVICE LEVEL NORTHWEST	1,876	SQFT	5.00	9,380
09600.000	Replace Flooring (or Clean Where Possible) - SERVICE LEVEL SOUTHWEST	9,928	SQFT	5.00	49,640
09600.000	Replace Flooring (or Clean Where Possible) - UPPER MECHANICAL SOUTH	459	SQFT	5.00	2,295
09600.010	Remove and Replace Flooring Completely - CLUB LEVEL CONCOURSE	42,280	SQFT	15.00	634,200
	Total 096000 Flooring				**1,407,845**
	211313 Wet pipe sprinklers				
21131.301	Replace Sprinkler System Heads as Required	1	LS	50,000	50,000
	Total 211313 Wet pipe sprinklers				**50,000**

Tropicana Field - Hurricane Milton Damage Assessment

St. Petersburg, FL

Project Size: 1 GSF 1 Units

Item	Description	Quantity	Unit $	Total $
	B0 Ballpark			
	224213 Commercial water closets, urinals and bidets			
22421.300	Replace Plumbing Fixtures at Damaged Walls	1 LS	100,000	100,000
	Total 224213 Commercial water closets, urinals and bidets			**100,000**
	230500 Common HVAC work results			
23050.490	Recomission HVAC System / Replace Filters	1 LS	350,000	350,000
	Total 230500 Common HVAC work results			**350,000**
	260000 Electrical			
26000.010	Test the Electrical Grid (including all risers) for QC Assurance and Reliability	1 LS	100,000	100,000
26000.020	Electrical Grid Repairs Following Assessment	1 LS	500,000	500,000
26000.030	Catwalk Show Lights Replacement	1 LS	300,000	300,000
26000.040	Catwalk Sports Lights Replacement	1 LS	300,000	300,000
26000.050	Catwalk Outlet and Misc. Hardware Replacement	1 LS	200,000	200,000
26000.110	Catwalk Electrical Testing and Recondition as Needed	1 LS	250,000	250,000
26000.200	Test Press Areas on Both Levels Replace Electrical Outlets and Lights as Needed	1 LS	100,000	100,000
26000.910	Lightning Protection System - Assessment / Testing	1 LS	50,000	50,000
26000.920	Lightning Protection System - Full Repair / Replacement of System	1 LS	300,000	300,000
	Total 260000 Electrical			**2,100,000**
	271000 Structured cable			
27000.011	Catwalk -Test all Network Cabling	1 LS	50,000	50,000
27000.012	Catwalk - Repair and Replace Network Cableing and Parts as Needed	1 LS	100,000	100,000
27000.021	Catwalk - Test Broadcast System Cableing	1 LS	50,000	50,000
27000.022	Catwalk - Repair and Replace Broadcast System Cableing as Needed	1 LS	100,000	100,000
27000.031	Audio Array - Test and Recondition Network	1 LS	200,000	200,000
27000.032	Audio Array - Replace Damaged Network as Needed	1 LS	100,000	100,000
	Total 271000 Structured cable			**600,000**
	283100 Fire alarm systems			
28310.000	Fire Alarm	1 LS	100,000	100,000
	Total 283100 Fire alarm systems			**100,000**

Tropicana Field - Hurricane Milton Damage Assessment

St. Petersburg, FL

Project Size: 1 GSF 1 Units

Item	Description	Quantity	Unit $	Total $
	Total B0 Ballpark			**8,600,198**
	C0 Fabric Membrane Roof			
	010000 General requirements			
01000.000	General Requirements - PTFE Roof	1 LS	500,000	500,000
	Total 010000 General requirements			**500,000**
	051200 Structural steel framing			
05120.100	Repair Steel Roof Framing	1 LS	1,000,000	1,000,000
	Total 051200 Structural steel framing			**1,000,000**
	133100 Fabric structures			
13310.110	Roof Survey	1 LS	44,000	44,000
13310.120	PTFE Roof System	1 LS	13,770,000	13,770,000
	Total 133100 Fabric structures			**13,814,000**
	260000 Electrical			
26000.900	Temp Electrical for Roofing Contractor	1 LS	100,000	100,000
	Total 260000 Electrical			**100,000**
	Total C0 Fabric Membrane Roof			**15,414,000**
	E0 Content Damage			
	010000 General requirements			
01000.000	General Requirements - Contents	1 LS	100,000	100,000
	Total 010000 General requirements			**100,000**
	115200 Audio visual equipment			
11520.030	Replace Ad Panels	1 LS	250,000	250,000
11520.033	Audio Array - Replace All Speakers	1 LS	500,000	500,000
11520.040	Repair Daktronics LED System	1 LS	100,000	100,000
11520.040	Repair Scoreboard	1 LS	250,000	250,000
11520.040	Replace Broadcast Equipment as Needed	1 LS	200,000	200,000
11520.040	Replace MATV/wifi/das Equipment	1 LS	200,000	200,000

Tropicana Field - Hurricane Milton Damage Assessment

St. Petersburg, FL

Project Size: 1 GSF 1 Units

Estimate #01 , Rev #1
Estimate Date: 11/11/2024
Print Date: 11/11/2024

Item	Description	Quantity	Unit $	Total $
	E0 Content Damage			
	115200 Audio visual equipment			
11520.040	Replace Security / CCTV Equipment as Needed	1 LS	100,000	100,000
11520.040	Replace Video Coaching System	1 LS	400,000	400,000
11520.040	Replace Video Replay System	1 LS	1,200,000	1,200,000
	Total 115200 Audio visual equipment			**3,200,000**
	321800 Athletic surfaces			
32180.000	Replace Playing Field - Artificial Turf	1 LS	1,200,000	1,200,000
32180.000	Replace Playing Field - Infield Clay	1 LS	80,000	80,000
	Total 321800 Athletic surfaces			**1,280,000**
	Total E0 Content Damage			**4,580,000**
	ESTIMATE DETAIL TOTAL	**1 GSF**	**39,087,150**	**$39,087,150**

H

Estimated Schedule for Repairs

HENNESSY CONSTRUCTION SERVICES

AECOM HUNT

Project: Tropicana Roof Restoration

Tropicana Roof Restoration - DRAFT

Print Date: 11-Nov-24

Activity ID	Activity Name	OD
Tropicana Roof Restoration		363
MILESTONES		363
MS1020	Remediation Start	0
MS1030	Notice to Proceed	0
MS1060	Stop Work Issued	0
MS1050	CM Award	0
MS1070	Construction Start	0
MS1040	MLB All-Star Break	0
MS2040	Substantial Completion	0
MS2050	Final Completion	0
MS2060	Season Opener	0
PRE CONSTRUCTION		15
A1020	Scope Development	15
PM1070	Three Week Asssessment / Prepare & Submit Report	15
PROCUREMENT		239
Roof Fabric Membrane		239
PR2040	Roof Membrane - Survey the Roof	5
PR1000	Roof Membrane - Solicit Bidders	5
PR1010	Roof Membrane - Bid & Award	15
PR2020	Roof Membrane - Design & Engineering	95
PR2030	Roof Membrane - Procure Materials	105
PR2090	Roof Membrane - Fabricate & Deliver	75
Bid Pack #2		150
PR1020	Prepare Bid Package & Issue for Bids	20
PR1030	Bid Period	15
PR1040	Review Bids & Award	25
Long Lead Electrical		65
PR3020	Long Lead Electrical - Prepare & Submit Shop Drawings	20
PR3030	Long Lead Electrical - Review & Approve Shop Drawings	10
PR3090	Long Lead Electrical - Fabricate & Deliver	35
Low Voltage / AV System		65
PR6260	Low Voltage / AV System - Prepare & Submit Shop Drawings	20
PR6270	Low Voltage / AV System - Review & Approve Shop Drawings	10
PR6250	Low Voltage / AV System - Fabricate & Deliver	35
Exterior Metal Siding		45
PR6230	Exterior Metal Siding - Prepare & Submit Shop Drawings	10
PR6240	Exterior Metal Siding - Review & Approve Shop Drawings	10
PR6220	Exterior Metal Siding - Fabricate & Deliver	25
Tri-Vision Boards		70
PR4020	Tri-Vision Boards - Prepare & Submit Shop Drawings	20
PR4030	Tri-Vision Boards - Review & Approve Shop Drawings	10
PR4090	Tri-Vision Boards - Fabricate & Deliver	40
Drywall & Architectual Finishes		70
PR6170	Drywall & Finishes - Prepare & Submit Shop Drawings	20
PR6180	Drywall & Finishes - Review & Approve Shop Drawings	10
PR6160	Drywall & Finishes - Fabricate & Deliver	40
Playing Field		90
PR6190	Playing Field - Prepare & Submit Shop Drawings	20
PR6200	Playing Field - Review & Approve Shop Drawings	10
PR6210	Playing Field - Fabricate & Deliver	60
CONSTRUCTION		311
CN0010	Mobilize	5
Temp Protections		15
CN3020	Install Temporary Drainage for Bowl	15
CN2070	Install Temp Protection Throughout the Building	15
CN3030	Install Weather Protection for Electrical Panels	10
Debris Removal / Selective Demo		29
CN0020	Remove Damaged Roof (Global Rope Access)	20
CN2080	Remove Debris form Bowl	20

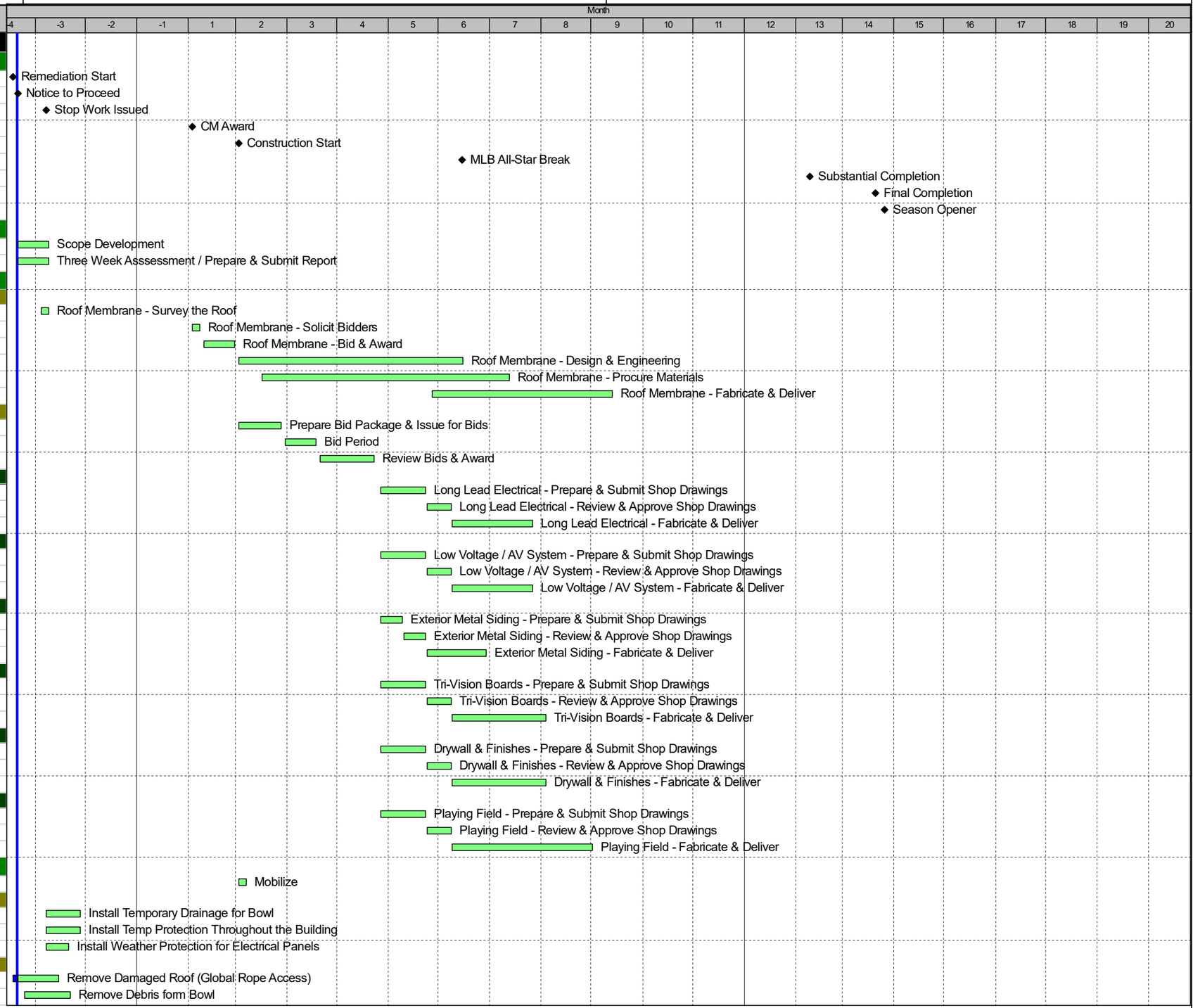

Remaining Level of Effort
Actual Level of Effort
Actual Work
Remaining Work

HENNESSY CONSTRUCTION SERVICES

AECOM HUNT

Project: Tropicana Roof Restoration

Tropicana Roof Restoration - DRAFT

Print Date: 11-Nov-24

Activity ID	Activity Name	OD
CN2090	Remove Cots from Field	5
CN2050	Decide on Removing Remaining (6) Panels	5
CN2100	Remove Playing Field	10
CN2060	Remove Remaining (6) Panels (if required)	15
Roof		101
CN9940	Install Roof Panels	101
CN9950	Building Weather Tight	0
Exterior Metal Panels		15
CN9960	Replace & Patch Exterior Metal Siding	15
Interior Architectual Repairs		271
CN12450	Clean Bowl	10
CN12470	Remediate All Damaged Drywall / Finishes	20
CN12430	Repair Damaged Architectual Finishes - Perimeter Under Existing Roof	30
CN12440	Repair Damaged Drywall - Outfield Areas	20
CN12480	Replace Ad Panels	5
CN12460	Replace & Patch Interior Acoustic Panels	20
CN12500	Repair Damaged Architectual Finishes - Bowl	15
CN12490	Re-Work Banners	5
Electical / AV Systems		50
CN12722	Install New Sound System in Bowl Catwalks	50
CN12712	Install New Elec System on Catwalks for Sports Lighting	50
CN12732	Replace Tri-Vision Boards	10
Playing Field		35
CN12742	Install New Playing Field	35
Startup / Commissioning		50
CN9700	Remove Temp Protection	10
CN9030	Recommission All Systems	35
CLOSEOUT		49
CO1030	Final Clean Building / Get Ready for Baseball	24
CO1020	Final Inspections	10
CO1010	Substantial Completion	0
CO1050	Final Completion / Closeout	25

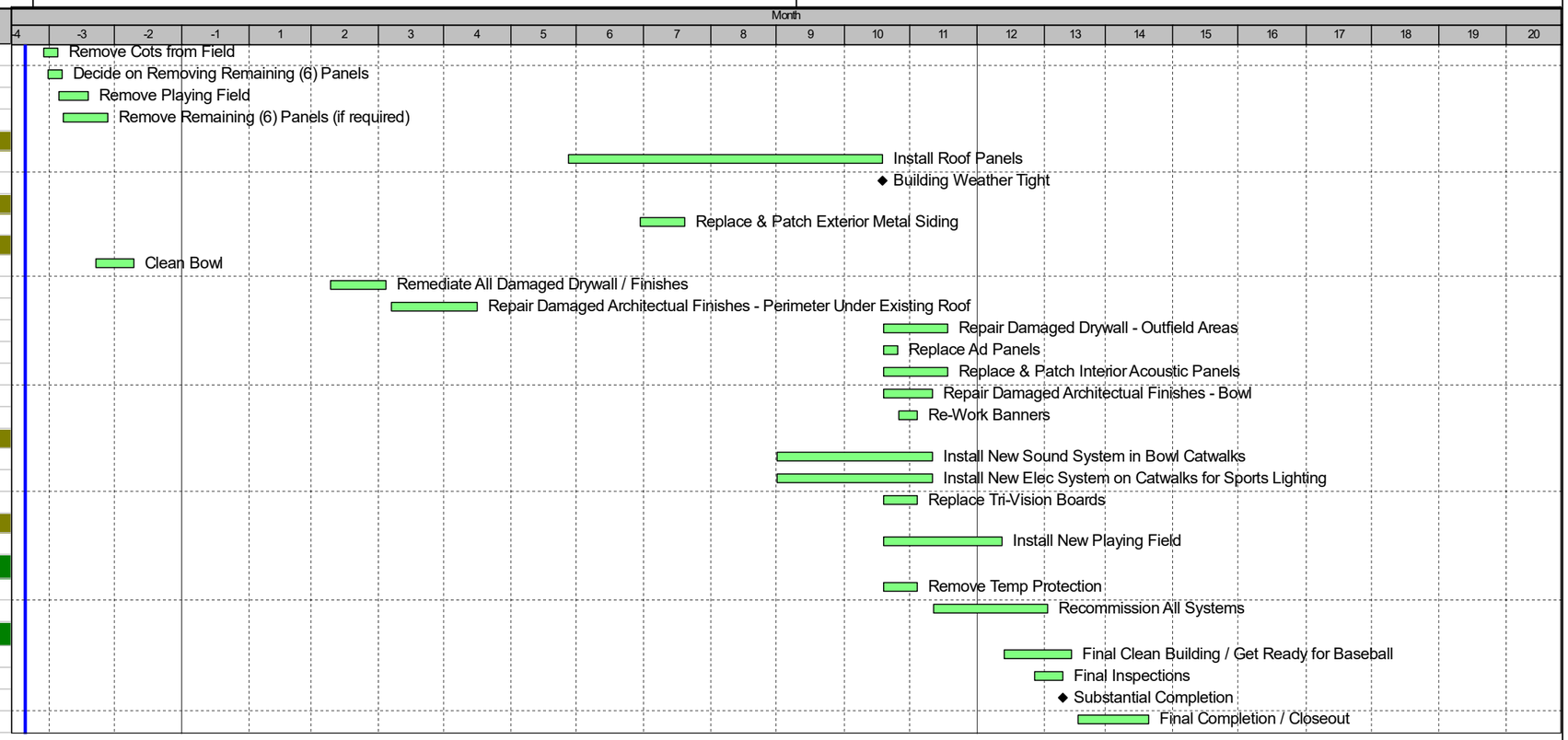

Remaining Level of Effort
Actual Level of Effort
Actual Work
Remaining Work

HENNESSY CONSTRUCTION SERVICES

AECOM HUNT